PT #: 12
DES: TOP
ELEV: 6562.50
N: 1270247.30
E: 2319202.81

PT #: 11
DES: TOP
ELEV: 6562.50
N: 1270173.49
E: 2319176.57

PT #: 13
DES: TOP
ELEV: 6562.47
N: 1270271.89
E: 2319183.34

PT #: 90
DES: BOP
ELEV: 6560.00
N: 1270176.00
E: 2319169.51

PT #: 89
DES: BOP
ELEV: 6560.00
N: 1270172.03
E: 2319167.20

PT #: 93
DES: BOP
ELEV: 6560.00
N: 1270249.37
E: 2319195.59

PT #: 94
DES: BOP
ELEV: 6560.06
N: 1270264.39
E: 2319183.34

PT #: 97
DES: RP
N: 1270251.89
E: 2319183.34

PT #: 10
DES: TOP
ELEV: 6562.50
N: 1270167.13
E: 2319172.88

PT #: 138
DES: RP
N: 1270134.38
E: 2319171.06

PT #: 95
DES: BOP
ELEV: 6560.00
N: 1270263.54
E: 2319162.10

PT #: 20
DES: BOP
ELEV: 6560.00
N: 1270152.33
E: 2319150.22

PT #: 9
DES: TOP
ELEV: 6562.50
N: 1270147.43
E: 2319155.91

PT #: 18
DES: BOP
ELEV: 6560.00
N: 1270088.59
E: 2319142.09

PT #: 96
DES: RP
N: 1270251.05
E: 2319162.60

PT #: 92
DES: TOP
ELEV: 6562.50
N: 1270271.03
E: 2319161.80

PT #: 98
DES: RP
N: 1270180.19
E: 2319157.73

PT #: 8
DES: TOP
ELEV: 6562.50
N: 1270135.46
E: 2319151.09

PT #: 105
DES: TOP
ELEV: 6562.50
N: 1270103.20
E: 2319149.34

PT #: 7
DES: TOP
ELEV: 6562.50
N: 1270088.30
E: 2319149.59

PT #: 100
DES: RP
N: 1270089.33
E: 2319136.23

PT #: 99
DES: RP
N: 1270186.98
E: 2319142.86

PT #: 19
DES: BOP
ELEV: 6560.00
N: 1270135.87
E: 2319143.60

PT #: 14
DES: BOP
ELEV: 6560.00
N: 1270254.73
E: 2319150.66

PT #: 137
DES: OUTLET STRUCTURE
N: 1270093.73
E: 2319130.36

PT #: 3
DES: TOP
ELEV: 6562.50
N: 1270256.93
E: 2319143.49

PT #: 17
DES: BOP
ELEV: 6560.00
N: 1270088.63
E: 2319130.36

PT #: 6
DES: WEIR
ELEV: 6562.00
N: 1270088.28
E: 2319122.86

PT #: 15
DES: BOP
ELEV: 6560.00
N: 1270191.11
E: 2319131.06

PT #: 16
DES: BOP
ELEV: 6560.00
N: 1270186.98
E: 2319130.36

PT #: 4
DES: TOP
ELEV: 6562.50
N: 1270193.43
E: 2319123.93

PT #: 5
DES: TOP
ELEV: 6562.50
N: 1270186.98
E: 2319122.86

PT #: 103
DES: TOP
ELEV: 6562.50
N: 1270094.39
E: 2319122.86

PT #: 104
DES: TOP
ELEV: 6562.50
N: 1270086.89
E: 2319123.05

PT #: 101
DES: WEIR
ELEV: 6561.50
N: 1270093.39
E: 2319122.86

PT #: 102
DES: WEIR
ELEV: 6561.50
N: 1270087.89
E: 2319122.86

WATER QUALITY DETENTION POND 1
REQUIRED WQCV: 0.085 ACRE-FT
TOTAL VOLUME: 0.408 ACRE-FT
BOTTOM ELEV: 6560.00-FT
TOP ELEV: 6562.50-FT
WATER QUALITY ELEV: 6560.63-FT
INLET GRATE ELEV: 6561.30-FT
OVERFLOW WEIR ELEV: 6561.50-FT

**LEGEND:**

TOP - TOP OF POND
BOP - BOTTOM OF POND
RP - RADIUS POINT

scale 10 5 0 10 20 feet

LOCATION MAP
N.T.S.

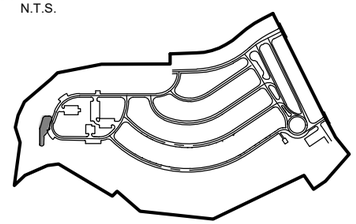

## SECTION A-A

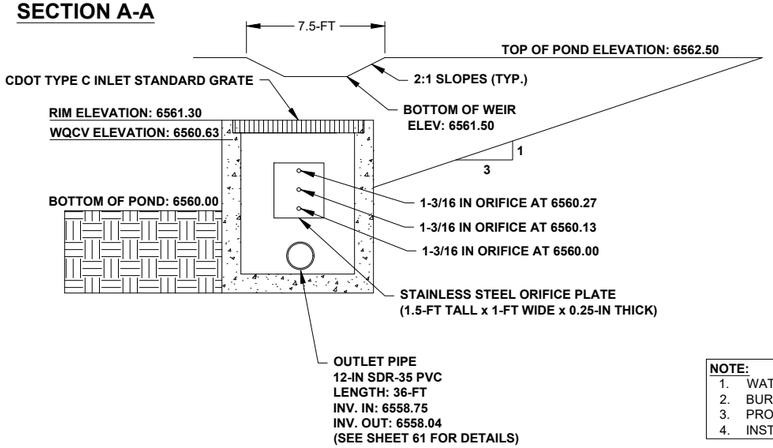


## SECTION B-B

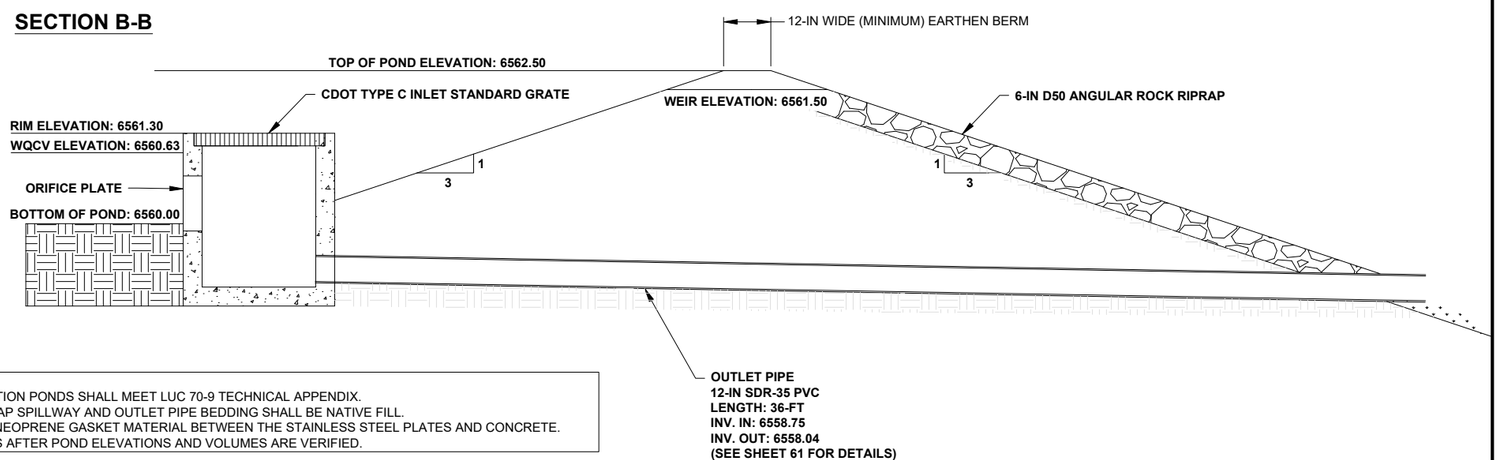


**NOTE:**
1. WATER QUALITY DETENTION PONDS SHALL MEET LUC 70-9 TECHNICAL APPENDIX.
2. BURIED/GROUTED RIP RAP SPILLWAY AND OUTLET PIPE BEDDING SHALL BE NATIVE FILL.
3. PROVIDE CONTINUOUS NEOPRENE GASKET MATERIAL BETWEEN THE STAINLESS STEEL PLATES AND CONCRETE.
4. INSTALL ORIFICE PLATES AFTER POND ELEVATIONS AND VOLUMES ARE VERIFIED.

| | | | | | | | | |
|---|---|---|---|---|---|---|---|---|
| SEH Project | 168892 | Rev.# | Revision Issue Description | Date | Rev.# | Revision Issue Description | Date | I HEREBY CERTIFY THAT THIS PLAN WAS PREPARED BY ME OR UNDER MY DIRECT SUPERVISION AND THAT I AM A DULY LICENSED PROFESSIONAL ENGINEER UNDER THE LAWS OF THE STATE OF CO. |
| Drawn By | SC/CM | | | | | | | TRAVIS MOONEY |
| Designed By | TM | | | | | | | DATE 01/17/2025 LICENSE NO. 0051259 |
| Checked By | SW | | | | | | | |

VILLAGE CAMP DURANGO
DURANGO, COLORADO

**WATER QUALITY DETENTION POND 1**



Save: 7/20/2025 6:20 PM cmolina Plot: 7/20/2025 6:25 PM \\sehinc.com\panzura\pzprojects\PT\RIO\BRE\168892\5-final-dsgn\51-drawings\10-Civil\cad\dwg\sheet_Village Camp\168892_POND DETAILS.dwg

WATER QUALITY DETENTION POND 2
REQUIRED WQCV: 0.167 ACRE-FT
TOTAL VOLUME: 0.528 ACRE-FT
BOTTOM ELEV: 6560.00 FT
TOP ELEV: EAST 6562.50 FT
WATER QUALITY ELEV: 6561.01-FT
INLET GRATE ELEV: 6561.25-FT
OVERFLOW WEIR ELEV: 6562.00-FT

**LEGEND:**

TOP - TOP OF POND
BOP - BOTTOM OF POND
RP - RADIUS POINT

LOCATION MAP
N.T.S.

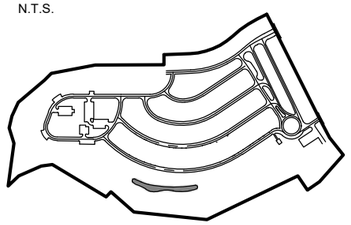

PT #: 65 DES: TOP ELEV: 6562.50 N: 1269864.18 E: 2319786.30
PT #: 51 DES: BOP ELEV: 6560.00 N: 1269857.39 E: 2319783.12
PT #: 60 DES: TOP ELEV: 6562.50 N: 1269854.98 E: 2319806.41
PT #: 59 DES: TOP ELEV: 6562.50 N: 1269860.99 E: 2319771.41
PT #: 49 DES: TOP ELEV: 6562.50 N: 1269845.79 E: 2319826.51
PT #: 70 DES: BOP ELEV: 6560.00 N: 1269850.31 E: 2319776.67
PT #: 26 DES: TOP ELEV: 6562.50 N: 1269828.07 E: 2319877.77
PT #: 52 DES: TOP ELEV: 6562.50 N: 1269835.90 E: 2319851.79
PT #: 57 DES: TOP ELEV: 6562.50 N: 1269845.77 E: 2319770.67
PT #: 38 DES: TOP ELEV: 6562.50 N: 1269812.89 E: 2320007.62
PT #: 39 DES: TOP ELEV: 6562.50 N: 1269817.47 E: 2320138.26
PT #: 61 DES: TOP ELEV: 6562.50 N: 1269824.47 E: 2320183.45
PT #: 130 DES: BOP ELEV: 6560.00 N: 1269810.06 E: 2320139.41
PT #: 53 DES: BOP ELEV: 6560.00 N: 1269817.04 E: 2320184.42
PT #: 50 DES: BOP ELEV: 6560.00 N: 1269848.16 E: 2319803.28
PT #: 132 DES: BOP ELEV: 6560.00 N: 1269838.94 E: 2319823.45
PT #: 131 DES: BOP ELEV: 6560.00 N: 1269820.76 E: 2319876.12
PT #: 27 DES: BOP ELEV: 6560.00 N: 1269805.40 E: 2320007.28
PT #: 135 DES: BOP ELEV: 6560.00 N: 1269792.60 E: 2319941.45
PT #: 136 DES: BOP ELEV: 6560.00 N: 1269794.61 E: 2320037.61
PT #: 63 DES: OUTLET STRUCTURE N: 1269790.49 E: 2320098.11
PT #: 55 DES: SWALE N: 1269815.33 E: 2320197.08
PT #: 28 DES: BOP ELEV: 6560.00 N: 1269807.33 E: 2320187.25
PT #: 133 DES: BOP ELEV: 6560.00 N: 1269833.26 E: 2319802.23
PT #: 67 DES: TOP ELEV: 6562.50 N: 1269814.26 E: 2319829.56
PT #: 69 DES: TOP ELEV: 6562.50 N: 1269826.14 E: 2319799.87
PT #: 31 DES: TOP ELEV: 6562.50 N: 1269798.83 E: 2319857.58
PT #: 64 DES: TOP ELEV: 6562.50 N: 1269781.79 E: 2319898.94
PT #: 134 DES: BOP ELEV: 6560.00 N: 1269805.04 E: 2319861.80
PT #: 56 DES: TOP ELEV: 6562.50 N: 1269785.39 E: 2319943.52
PT #: 40 DES: TOP ELEV: 6562.50 N: 1269791.43 E: 2319989.73
PT #: 58 DES: TOP ELEV: 6562.50 N: 1269787.25 E: 2320036.15
PT #: 127 DES: TOP ELEV: 6562.50 N: 1269782.16 E: 2320092.50
PT #: 66 DES: WEIR ELEV: 6561.50 N: 1269782.17 E: 2320093.50
PT #: 29 DES: TOP ELEV: 6562.50 N: 1269783.18 E: 2320114.09
PT #: 128 DES: TOP ELEV: 6562.50 N: 1269782.47 E: 2320103.48
PT #: 54 DES: WEIR ELEV: 6561.50 N: 1269782.43 E: 2320102.48
PT #: 62 DES: TOP ELEV: 6562.50 N: 1269800.42 E: 2320190.21

## SECTION A-A

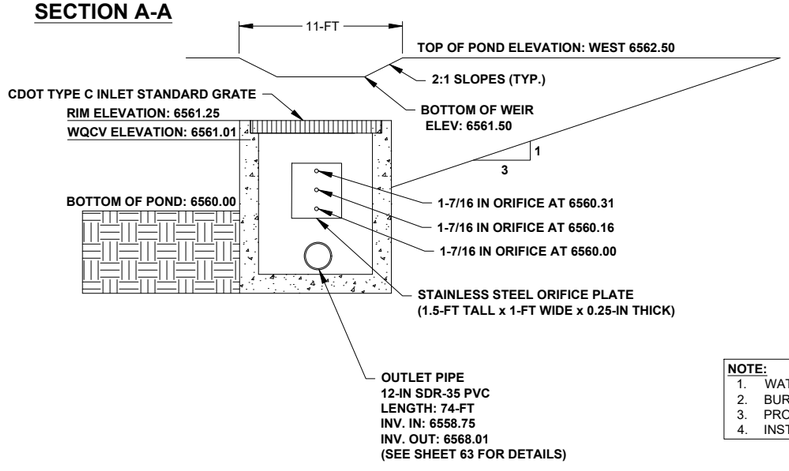


## SECTION B-B

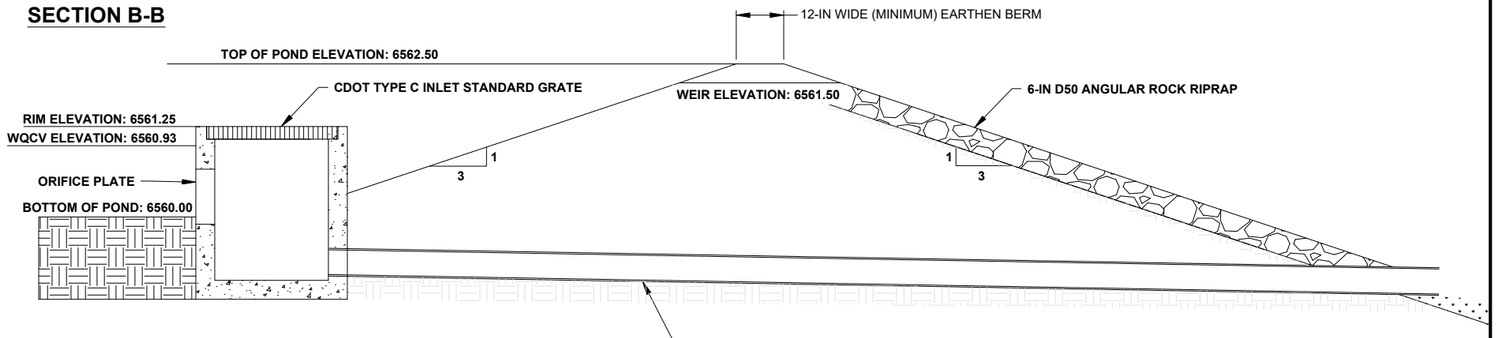


**NOTE:**
1. WATER QUALITY DETENTION PONDS SHALL MEET LUC 70-9 TECHNICAL APPENDIX.
2. BURIED/GROUTED RIP RAP SPILLWAY AND OUTLET PIPE BEDDING SHALL BE NATIVE FILL.
3. PROVIDE CONTINUOUS NEOPRENE GASKET MATERIAL BETWEEN THE STAINLESS STEEL PLATES AND CONCRETE.
4. INSTALL ORIFICE PLATES AFTER POND ELEVATIONS AND VOLUMES ARE VERIFIED.

| | | | | | | | |
|---|---|---|---|---|---|---|---|
| SEH Project | 168892 | Rev.# | Revision Issue Description | Date | Rev.# | Revision Issue Description | Date |
| Drawn By | SC/CM | | | | | | |
| Designed By | TM | | | | | | |
| Checked By | SW | | | | | | |

I HEREBY CERTIFY THAT THIS PLAN WAS PREPARED BY ME OR UNDER MY DIRECT SUPERVISION AND THAT I AM A DULY LICENSED PROFESSIONAL ENGINEER UNDER THE LAWS OF THE STATE OF CO.

TRAVIS MOONEY
DATE 01/17/2025 LICENSE NO. 0051259

VILLAGE CAMP DURANGO
DURANGO, COLORADO

**WATER QUALITY DETENTION POND 2**



Save: 7/20/2025 6:40 PM cmolina Plot: 7/20/2025 6:59 PM \\sehinc.com\panzura\pzprojects\PTHR\ROBRE\168892\5-final-dsgn\51-drawings\10-Civilcad\dwg\sheet_Village Camp\168892_POND DETAILS.dwg

**LEGEND:**

TOP - TOP OF POND
BOP - BOTTOM OF POND
RP - RADIUS POINT

PT #: 79
DES: TOP
ELEV: 6564.00
N: 1269937.60
E: 2320513.98

PT #: 106
DES: TOP
ELEV: 6564.02
N: 1269948.63
E: 2320529.89

PT #: 87
DES: TOP
ELEV: 6564.00
N: 1269952.58
E: 2320548.85

PT #: 118
DES: TOP
ELEV: 6564.00
N: 1269977.08
E: 2320600.51

PT #: 108
DES: TOP
ELEV: 6564.00
N: 1269981.64
E: 2320606.56

PT #: 74
DES: BOP
ELEV: 6561.00
N: 1269974.25
E: 2320611.70

PT #: 107
DES: TOP
ELEV: 6564.00
N: 1269958.93
E: 2320573.23

PT #: 117
DES: BOP
ELEV: 6561.00
N: 1269965.55
E: 2320600.15

PT #: 73
DES: TOP
ELEV: 6561.00
N: 1269931.52
E: 2320520.62

PT #: 80
DES: TOP
ELEV: 6564.01
N: 1269983.12
E: 2320634.85

PT #: 82
DES: TOP
ELEV: 6564.12
N: 1269921.44
E: 2320511.50

PT #: 116
DES: BOP
ELEV: 6561.00
N: 1269943.58
E: 2320549.27

PT #: 139
DES: OUTLET STRUCTURE
N: 1269948.49
E: 2320629.54

PT #: 71
DES: BOP
ELEV: 6561.00
N: 1269920.76
E: 2320546.69

PT #: 109
DES: BOP
ELEV: 6561.00
N: 1269950.52
E: 2320576.46

PT #: 72
DES: TOP
ELEV: 6561.00
N: 1269921.49
E: 2320525.34

PT #: 125
DES: BOP
ELEV: 6561.00
N: 1269949.41
E: 2320627.32

PT #: 126
DES: BOP
ELEV: 6561.00
N: 1269942.70
E: 2320607.96

PT #: 88
DES: BOP
N: 1269927.86
E: 2320579.64

PT #: 123
DES: BOP
ELEV: 6561.00
N: 1269958.47
E: 2320641.31

PT #: 78
DES: TOP
ELEV: 6564.00
N: 1269912.49
E: 2320525.18

PT #: 121
DES: TOP
ELEV: 6564.00
N: 1269959.36
E: 2320650.28

PT #: 124
DES: BOP
ELEV: 6561.00
N: 1269951.55
E: 2320637.04

PT #: 81
DES: TOP
ELEV: 6564.00
N: 1269912.12
E: 2320535.86

PT #: 77
DES: TOP
ELEV: 6564.00
N: 1269911.75
E: 2320546.55

PT #: 120
DES: TOP
ELEV: 6563.81
N: 1269913.79
E: 2320565.49

PT #: 129
DES: TOP
ELEV: 6564.00
N: 1269940.57
E: 2320629.23

PT #: 85
DES: TOP
ELEV: 6564.00
N: 1269934.73
E: 2320612.13

PT #: 75
DES: TOP
ELEV: 6563.86
N: 1269942.62
E: 2320636.44

PT #: 83
DES: TOP
ELEV: 6564.00
N: 1269942.81
E: 2320639.19

PT #: 86
DES: TOP
ELEV: 6564.00
N: 1269919.77
E: 2320583.59

PT #: 119
DES: TOP
ELEV: 6564.00
N: 1269927.25
E: 2320597.86

PT #: 84
DES: WEIR
ELEV: 6563.00
N: 1269940.71
E: 2320629.71

PT #: 76
DES: WEIR
ELEV: 6563.00
N: 1269942.49
E: 2320635.96

6567
6566
6565
6563
6562
6561

WATER QUALITY DETENTION POND 3
REQUIRED WQCV: 0.129 ACRE-FT
TOTAL VOLUME: 0.289 ACRE-FT
BOTTOM ELEV: 6561.00-FT
TOP ELEV: 6564.00-FT
WATER QUALITY ELEV: 6562.60-FT
INLET GRATE ELEV: 6562.70-FT
OVERFLOW WEIR ELEV: 6563.00-FT

S

N

10 0 10 20
scale 5 feet

LOCATION MAP
N.T.S.

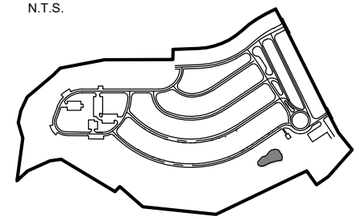

## SECTION A-A

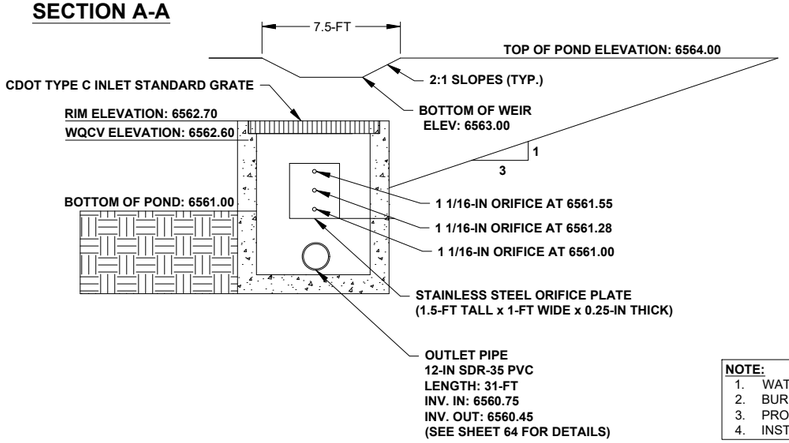


## SECTION B-B

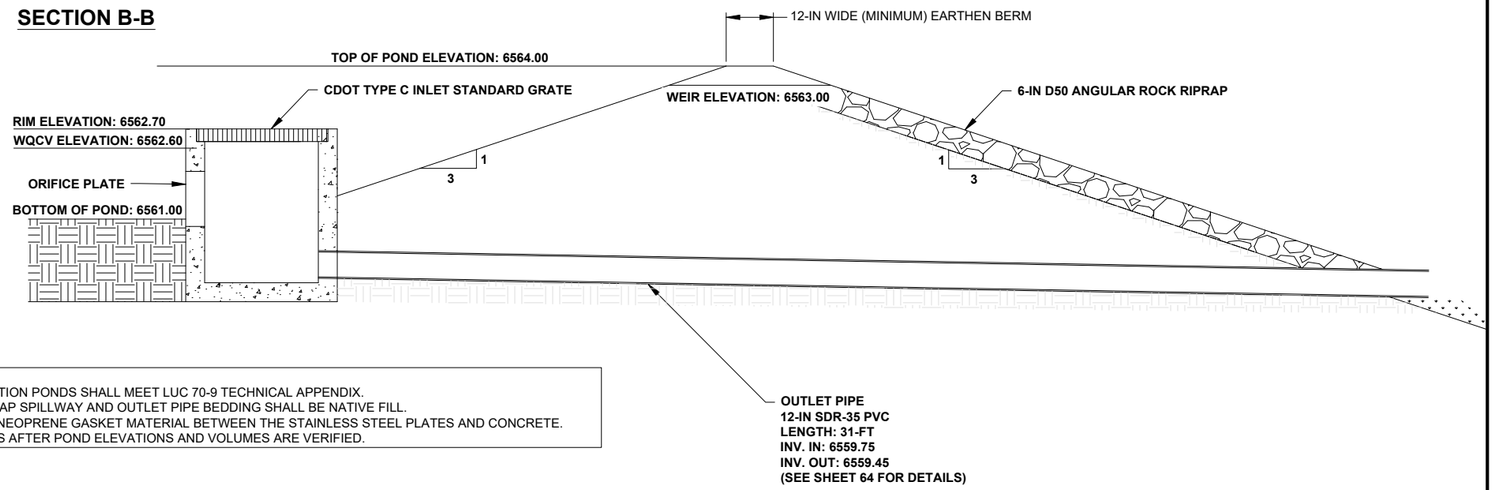


**NOTE:**
1. WATER QUALITY DETENTION PONDS SHALL MEET LUC 70-9 TECHNICAL APPENDIX.
2. BURIED/GROUTED RIP RAP SPILLWAY AND OUTLET PIPE BEDDING SHALL BE NATIVE FILL.
3. PROVIDE CONTINUOUS NEOPRENE GASKET MATERIAL BETWEEN THE STAINLESS STEEL PLATES AND CONCRETE.
4. INSTALL ORIFICE PLATES AFTER POND ELEVATIONS AND VOLUMES ARE VERIFIED.

| | |
|---|---|
| SEH Project | 168892 |
| Drawn By | SC/CM |
| Designed By | TM |
| Checked By | SW |

| Rev.# | Revision Issue Description | Date |
|---|---|---|
| | | |

| Rev.# | Revision Issue Description | Date |
|---|---|---|
| | | |

SEH

I HEREBY CERTIFY THAT THIS PLAN WAS PREPARED BY ME OR UNDER MY DIRECT SUPERVISION AND THAT I AM A DULY LICENSED PROFESSIONAL ENGINEER UNDER THE LAWS OF THE STATE OF CO.

TRAVIS MOONEY
DATE 01/17/2025 LICENSE NO. 0051259

VILLAGE CAMP DURANGO
DURANGO, COLORADO

**WATER QUALITY DETENTION POND 3**



Save: 7/20/2025 3:33 PM cmolina Plot: 7/20/2025 3:43 PM \\sehinc.com\panzura\pzprojects\PTI\RIROBRE\168892\5-final-dsgn\51-drawings\10-Civil\cad\dwg\sheet_Village Camp\168892_POND DETAILS.dwg

**LEGEND:**

TOP - TOP OF POND
BOP - BOTTOM OF POND
RP - RADIUS POINT

PT #: 151
DES: DES: BOP
ELEV: 6565.50
N: 1270055.41
E: 2320882.46

PT #: 145
DES: DES: TOP
ELEV: 6567.50
N: 1270060.28
E: 2320878.96

PT #: 144
DES: DES: TOP
ELEV: 6567.50
N: 1270089.01
E: 2320919.02

PT #: 150
DES: DES: BOP
ELEV: 6565.50
N: 1270084.14
E: 2320922.51

PT #: 146
DES: DES: TOP
ELEV: 6567.50
N: 1270054.96
E: 2320876.47

PT #: 149
DES: DES: BOP
ELEV: 6565.50
N: 1270081.95
E: 2320922.76

PT #: 147
DES: DES: TOP
ELEV: 6567.50
N: 1270043.10
E: 2320877.36

PT #: 143
DES: DES: TOP
ELEV: 6567.50
N: 1270084.82
E: 2320928.47

PT #: 152
DES: DES: OUTLET STRUCTURE
N: 1270045.03
E: 2320883.23

PT #: 148
DES: DES: BOP
ELEV: 6565.50
N: 1270043.55
E: 2320883.34

PT #: 142
DES: DES: TOP
ELEV: 6567.50
N: 1270082.63
E: 2320928.72

PT #: 154
DES: DES: WEIR
ELEV: 6567.00
N: 1270040.40
E: 2320878.03

PT #: 141
DES: DES: TOP
ELEV: 6567.50
N: 1270077.65
E: 2320926.95

PT #: 153
DES: DES: WEIR
ELEV: 6567.00
N: 1270038.35
E: 2320880.23

PT #: 140
DES: DES: TOP
ELEV: 6567.50
N: 1270039.25
E: 2320887.53

6570 6569 6568 6567 6566

WATER QUALITY DETENTION POND 4
REQUIRED WQCV: 0.011 ACRE-FT
TOTAL VOLUME: 0.032 ACRE-FT
BOTTOM ELEV: 6565.50-FT
TOP ELEV: 6567.50-FT
WATER QUALITY ELEV: 6566.50-FT
INLET GRATE ELEV: 6566.75-FT
OVERFLOW WEIR ELEV: 6567.00-FT

N

5 0 5 10
scale 2.5 feet

LOCATION MAP
N.T.S.

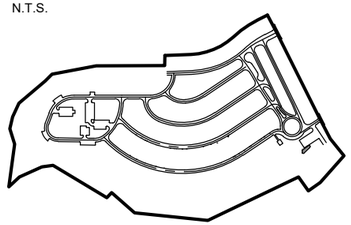

## SECTION A-A

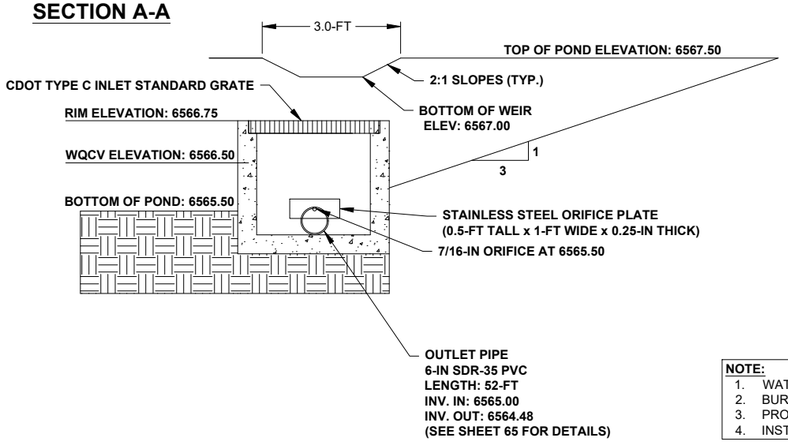


## SECTION B-B

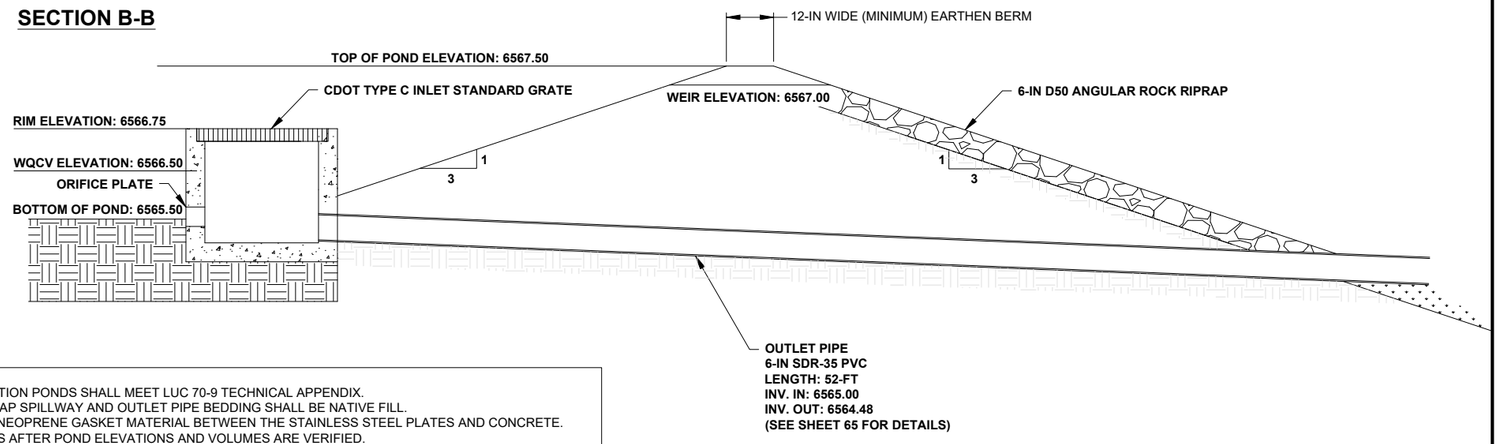


**NOTE:**
1. WATER QUALITY DETENTION PONDS SHALL MEET LUC 70-9 TECHNICAL APPENDIX.
2. BURIED/GROUTED RIP RAP SPILLWAY AND OUTLET PIPE BEDDING SHALL BE NATIVE FILL.
3. PROVIDE CONTINUOUS NEOPRENE GASKET MATERIAL BETWEEN THE STAINLESS STEEL PLATES AND CONCRETE.
4. INSTALL ORIFICE PLATES AFTER POND ELEVATIONS AND VOLUMES ARE VERIFIED.

| | |
|---|---|
| SEH Project | 168892 |
| Drawn By | SC/CM |
| Designed By | TM |
| Checked By | SW |

| Rev.# | Revision Issue Description | Date |
|---|---|---|
| | | |

| Rev.# | Revision Issue Description | Date |
|---|---|---|
| | | |

I HEREBY CERTIFY THAT THIS PLAN WAS PREPARED BY ME OR UNDER MY DIRECT SUPERVISION AND THAT I AM A DULY LICENSED PROFESSIONAL ENGINEER UNDER THE LAWS OF THE STATE OF CO.

TRAVIS MOONEY
DATE 01/17/2025 LICENSE NO. 0051259

VILLAGE CAMP DURANGO
DURANGO, COLORADO

**WATER QUALITY DETENTION POND 4**



Save: 7/20/2025 3:33 PM cmolina Plot: 7/20/2025 3:43 PM \\sehinc.com\panzura\pzprojects\PT\RIROBRE\168892\5-final-dsgn\51-drawings\10-Civil\cad\dwg\sheet_V

# Culvert Report



## SD1: 15-IN ADS PIPE

| | | |
|---|---|---|
| Invert Elev Dn (ft) | = | 6560.16 |
| Pipe Length (ft) | = | 66.00 |
| Slope (%) | = | 0.50 |
| Invert Elev Up (ft) | = | 6560.49 |
| Rise (in) | = | 15.0 |
| Shape | = | Circular |
| Span (in) | = | 15.0 |
| No. Barrels | = | 1 |
| n-Value | = | 0.012 |
| Culvert Type | = | Circular Culvert |
| Culvert Entrance | = | Smooth tapered inlet throat |
| Coeff. K,M,c,Y,k | = | 0.534, 0.555, 0.0196, 0.9, 0.2 |

**Embankment**

| | | |
|---|---|---|
| Top Elevation (ft) | = | 6563.59 |
| Top Width (ft) | = | 24.00 |
| Crest Width (ft) | = | 24.00 |

**Calculations**

| | | |
|---|---|---|
| Qmin (cfs) | = | 1.00 |
| Qmax (cfs) | = | 12.00 |
| Tailwater Elev (ft) | = | (dc+D)/2 |

**Highlighted**

| | | |
|---|---|---|
| Qtotal (cfs) | = | 3.50 |
| Qpipe (cfs) | = | 3.50 |
| Qovertop (cfs) | = | 0.00 |
| Veloc Dn (ft/s) | = | 3.32 |
| Veloc Up (ft/s) | = | 4.50 |
| HGL Dn (ft) | = | 6561.16 |
| HGL Up (ft) | = | 6561.25 |
| Hw Elev (ft) | = | 6561.61 |
| Hw/D (ft) | = | 0.90 |
| Flow Regime | = | Inlet Control |

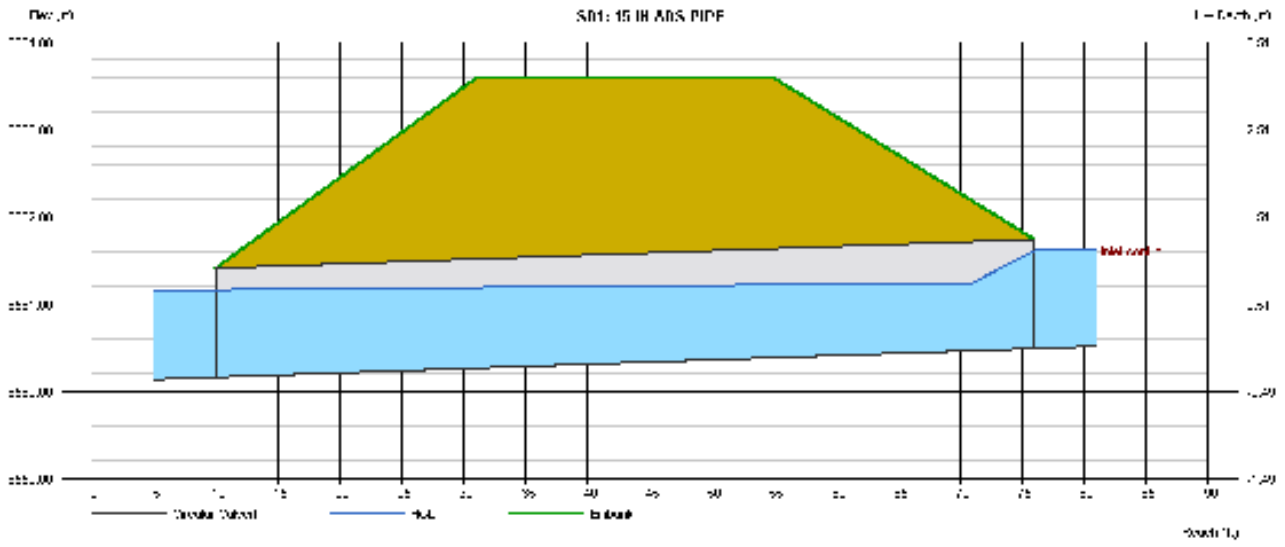

# Culvert Report



## SD2: 12-IN SDR-35 PVC

| | | |
|---|---|---|
| Invert Elev Dn (ft) | = | 6558.18 |
| Pipe Length (ft) | = | 30.00 |
| Slope (%) | = | 1.90 |
| Invert Elev Up (ft) | = | 6558.75 |
| Rise (in) | = | 12.0 |
| Shape | = | Circular |
| Span (in) | = | 12.0 |
| No. Barrels | = | 1 |
| n-Value | = | 0.012 |
| Culvert Type | = | Circular Culvert |
| Culvert Entrance | = | Smooth tapered inlet throat |
| Coeff. K,M,c,Y,k | = | 0.534, 0.555, 0.0196, 0.9, 0.2 |

**Embankment**

| | | |
|---|---|---|
| Top Elevation (ft) | = | 6562.50 |
| Top Width (ft) | = | 24.00 |
| Crest Width (ft) | = | 24.00 |

**Calculations**

| | | |
|---|---|---|
| Qmin (cfs) | = | 1.00 |
| Qmax (cfs) | = | 12.00 |
| Tailwater Elev (ft) | = | (dc+D)/2 |

**Highlighted**

| | | |
|---|---|---|
| Qtotal (cfs) | = | 3.50 |
| Qpipe (cfs) | = | 3.50 |
| Qovertop (cfs) | = | 0.00 |
| Veloc Dn (ft/s) | = | 4.70 |
| Veloc Up (ft/s) | = | 5.20 |
| HGL Dn (ft) | = | 6559.08 |
| HGL Up (ft) | = | 6559.55 |
| Hw Elev (ft) | = | 6560.03 |
| Hw/D (ft) | = | 1.28 |
| Flow Regime | = | Inlet Control |

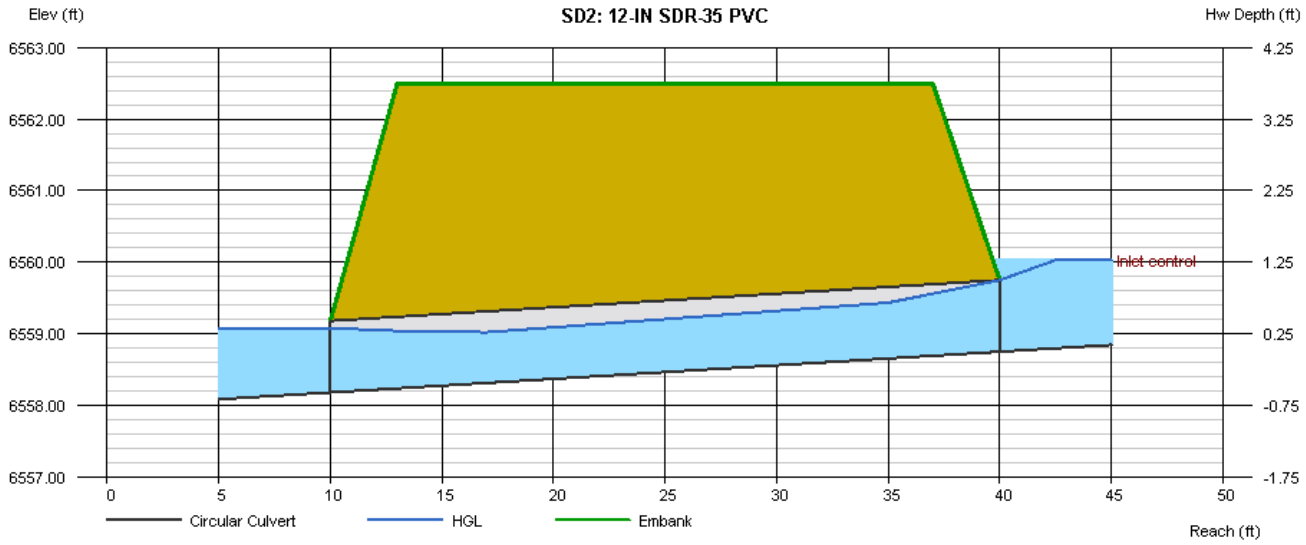

# Culvert Report

Hydraflow Express Extension for Autodesk® Civil 3D® by Autodesk, Inc. Friday, Aug 15 2025

## SD3/SD4: 15-IN ADS PIPE

| | | |
|---|---|---|
| Invert Elev Dn (ft) | = | 6564.52 |
| Pipe Length (ft) | = | 45.00 |
| Slope (%) | = | 0.87 |
| Invert Elev Up (ft) | = | 6564.91 |
| Rise (in) | = | 12.0 |
| Shape | = | Circular |
| Span (in) | = | 12.0 |
| No. Barrels | = | 1 |
| n-Value | = | 0.012 |
| Culvert Type | = | Circular Culvert |
| Culvert Entrance | = | Smooth tapered inlet throat |
| Coeff. K,M,c,Y,k | = | 0.534, 0.555, 0.0196, 0.9, 0.2 |

**Embankment**

| | | |
|---|---|---|
| Top Elevation (ft) | = | 6567.92 |
| Top Width (ft) | = | 24.00 |
| Crest Width (ft) | = | 24.00 |

**Calculations**

| | | |
|---|---|---|
| Qmin (cfs) | = | 1.00 |
| Qmax (cfs) | = | 12.00 |
| Tailwater Elev (ft) | = | (dc+D)/2 |

**Highlighted**

| | | |
|---|---|---|
| Qtotal (cfs) | = | 1.50 |
| Qpipe (cfs) | = | 1.50 |
| Qovertop (cfs) | = | 0.00 |
| Veloc Dn (ft/s) | = | 2.34 |
| Veloc Up (ft/s) | = | 3.65 |
| HGL Dn (ft) | = | 6565.28 |
| HGL Up (ft) | = | 6565.43 |
| Hw Elev (ft) | = | 6565.68 |
| Hw/D (ft) | = | 0.76 |
| Flow Regime | = | Inlet Control |

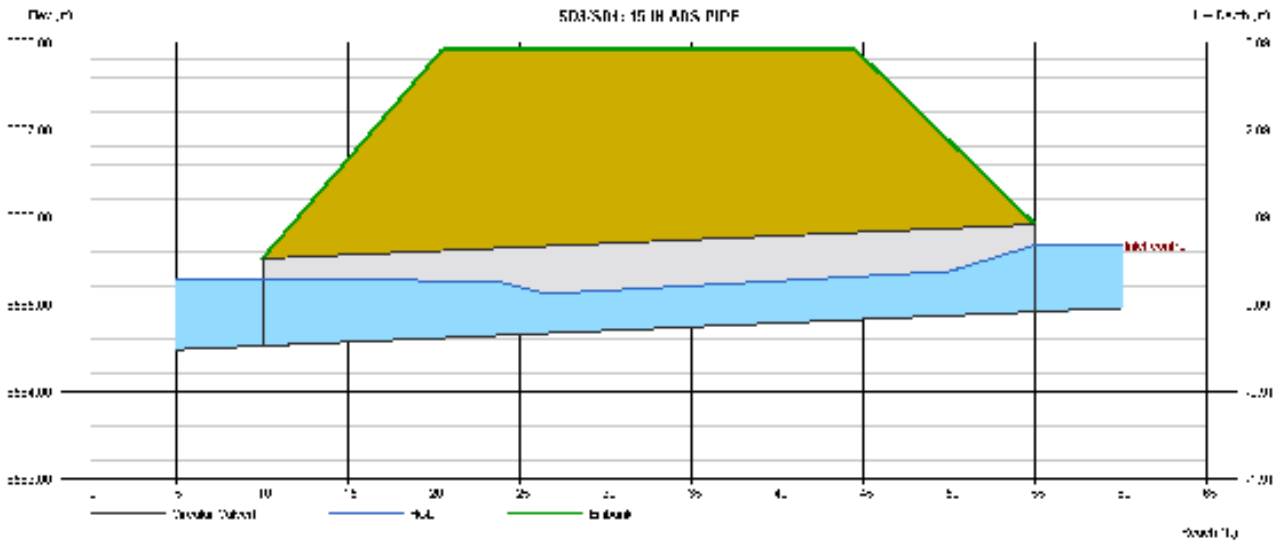

# Culvert Report

Hydraflow Express Extension for Autodesk® Civil 3D® by Autodesk, Inc. Friday, Aug 15 2025

## SD5/SD6: 15-IN ADS PIPE

| | | |
|---|---|---|
| Invert Elev Dn (ft) | = | 6563.51 |
| Pipe Length (ft) | = | 33.00 |
| Slope (%) | = | 0.55 |
| Invert Elev Up (ft) | = | 6563.69 |
| Rise (in) | = | 15.0 |
| Shape | = | Circular |
| Span (in) | = | 15.0 |
| No. Barrels | = | 1 |
| n-Value | = | 0.012 |
| Culvert Type | = | Circular Culvert |
| Culvert Entrance | = | Smooth tapered inlet throat |
| Coeff. K,M,c,Y,k | = | 0.534, 0.555, 0.0196, 0.9, 0.2 |

**Embankment**

| | | |
|---|---|---|
| Top Elevation (ft) | = | 6567.53 |
| Top Width (ft) | = | 24.00 |
| Crest Width (ft) | = | 24.00 |

**Calculations**

| | | |
|---|---|---|
| Qmin (cfs) | = | 1.00 |
| Qmax (cfs) | = | 12.00 |
| Tailwater Elev (ft) | = | (dc+D)/2 |

**Highlighted**

| | | |
|---|---|---|
| Qtotal (cfs) | = | 2.00 |
| Qpipe (cfs) | = | 2.00 |
| Qovertop (cfs) | = | 0.00 |
| Veloc Dn (ft/s) | = | 2.10 |
| Veloc Up (ft/s) | = | 3.73 |
| HGL Dn (ft) | = | 6564.42 |
| HGL Up (ft) | = | 6564.25 |
| Hw Elev (ft) | = | 6564.51 |
| Hw/D (ft) | = | 0.66 |
| Flow Regime | = | Inlet Control |

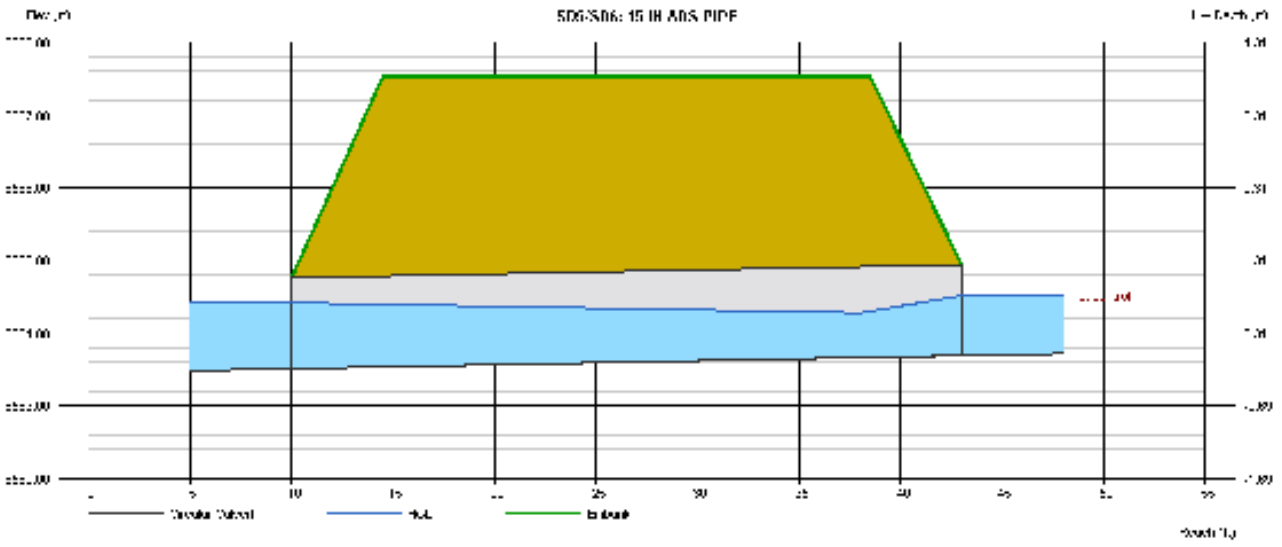

# Culvert Report

Hydraflow Express Extension for Autodesk® Civil 3D® by Autodesk, Inc. Friday, Aug 15 2025

## SD7/SD8: 15-IN ADS PIPE

| | | |
|---|---|---|
| Invert Elev Dn (ft) | = | 6562.62 |
| Pipe Length (ft) | = | 37.00 |
| Slope (%) | = | 0.49 |
| Invert Elev Up (ft) | = | 6562.80 |
| Rise (in) | = | 15.0 |
| Shape | = | Circular |
| Span (in) | = | 15.0 |
| No. Barrels | = | 1 |
| n-Value | = | 0.012 |
| Culvert Type | = | Circular Culvert |
| Culvert Entrance | = | Smooth tapered inlet throat |
| Coeff. K,M,c,Y,k | = | 0.534, 0.555, 0.0196, 0.9, 0.2 |

**Embankment**

| | | |
|---|---|---|
| Top Elevation (ft) | = | 6566.55 |
| Top Width (ft) | = | 24.00 |
| Crest Width (ft) | = | 24.00 |

**Calculations**

| | | |
|---|---|---|
| Qmin (cfs) | = | 1.00 |
| Qmax (cfs) | = | 15.00 |
| Tailwater Elev (ft) | = | (dc+D)/2 |

**Highlighted**

| | | |
|---|---|---|
| Qtotal (cfs) | = | 2.50 |
| Qpipe (cfs) | = | 2.50 |
| Qovertop (cfs) | = | 0.00 |
| Veloc Dn (ft/s) | = | 2.52 |
| Veloc Up (ft/s) | = | 4.01 |
| HGL Dn (ft) | = | 6563.56 |
| HGL Up (ft) | = | 6563.43 |
| Hw Elev (ft) | = | 6563.73 |
| Hw/D (ft) | = | 0.74 |
| Flow Regime | = | Inlet Control |

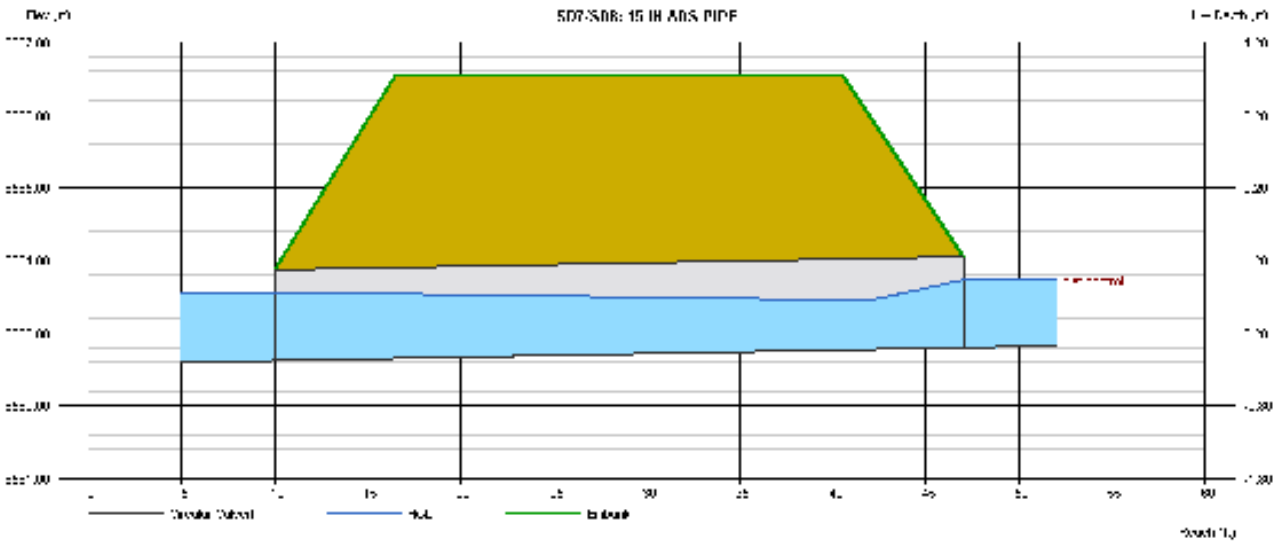

# Culvert Report

Hydraflow Express Extension for Autodesk® Civil 3D® by Autodesk, Inc. Friday, Aug 15 2025

## SD9/SD10: 15-IN ADS PIPE

| | | |
|---|---|---|
| Invert Elev Dn (ft) | = | 6561.59 |
| Pipe Length (ft) | = | 47.00 |
| Slope (%) | = | 0.49 |
| Invert Elev Up (ft) | = | 6561.82 |
| Rise (in) | = | 15.0 |
| Shape | = | Circular |
| Span (in) | = | 15.0 |
| No. Barrels | = | 1 |
| n-Value | = | 0.012 |
| Culvert Type | = | Circular Culvert |
| Culvert Entrance | = | Smooth tapered inlet throat |
| Coeff. K,M,c,Y,k | = | 0.534, 0.555, 0.0196, 0.9, 0.2 |

**Embankment**

| | | |
|---|---|---|
| Top Elevation (ft) | = | 6565.24 |
| Top Width (ft) | = | 24.00 |
| Crest Width (ft) | = | 24.00 |

**Calculations**

| | | |
|---|---|---|
| Qmin (cfs) | = | 1.00 |
| Qmax (cfs) | = | 15.00 |
| Tailwater Elev (ft) | = | (dc+D)/2 |

**Highlighted**

| | | |
|---|---|---|
| Qtotal (cfs) | = | 2.50 |
| Qpipe (cfs) | = | 2.50 |
| Qovertop (cfs) | = | 0.00 |
| Veloc Dn (ft/s) | = | 2.52 |
| Veloc Up (ft/s) | = | 4.01 |
| HGL Dn (ft) | = | 6562.53 |
| HGL Up (ft) | = | 6562.45 |
| Hw Elev (ft) | = | 6562.75 |
| Hw/D (ft) | = | 0.74 |
| Flow Regime | = | Inlet Control |

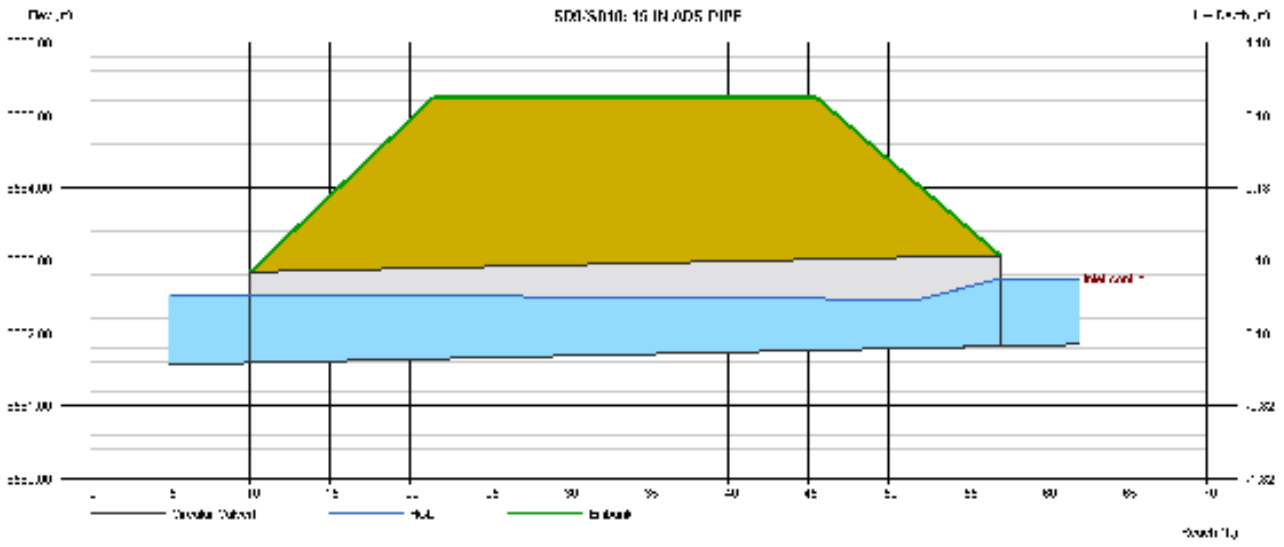

# Culvert Report

Hydraflow Express Extension for Autodesk® Civil 3D® by Autodesk, Inc. Friday, Aug 15 2025

## SD11: 12-IN SDR-35 PVC

| | | |
|---|---|---|
| Invert Elev Dn (ft) | = | 6558.14 |
| Pipe Length (ft) | = | 61.00 |
| Slope (%) | = | 1.00 |
| Invert Elev Up (ft) | = | 6558.75 |
| Rise (in) | = | 12.0 |
| Shape | = | Circular |
| Span (in) | = | 12.0 |
| No. Barrels | = | 1 |
| n-Value | = | 0.012 |
| Culvert Type | = | Circular Culvert |
| Culvert Entrance | = | Smooth tapered inlet throat |
| Coeff. K,M,c,Y,k | = | 0.534, 0.555, 0.0196, 0.9, 0.2 |

**Embankment**

| | | |
|---|---|---|
| Top Elevation (ft) | = | 6562.50 |
| Top Width (ft) | = | 24.00 |
| Crest Width (ft) | = | 24.00 |

**Calculations**

| | | |
|---|---|---|
| Qmin (cfs) | = | 1.00 |
| Qmax (cfs) | = | 12.00 |
| Tailwater Elev (ft) | = | (dc+D)/2 |

**Highlighted**

| | | |
|---|---|---|
| Qtotal (cfs) | = | 3.00 |
| Qpipe (cfs) | = | 3.00 |
| Qovertop (cfs) | = | 0.00 |
| Veloc Dn (ft/s) | = | 4.13 |
| Veloc Up (ft/s) | = | 4.80 |
| HGL Dn (ft) | = | 6559.01 |
| HGL Up (ft) | = | 6559.49 |
| Hw Elev (ft) | = | 6559.93 |
| Hw/D (ft) | = | 1.18 |
| Flow Regime | = | Inlet Control |

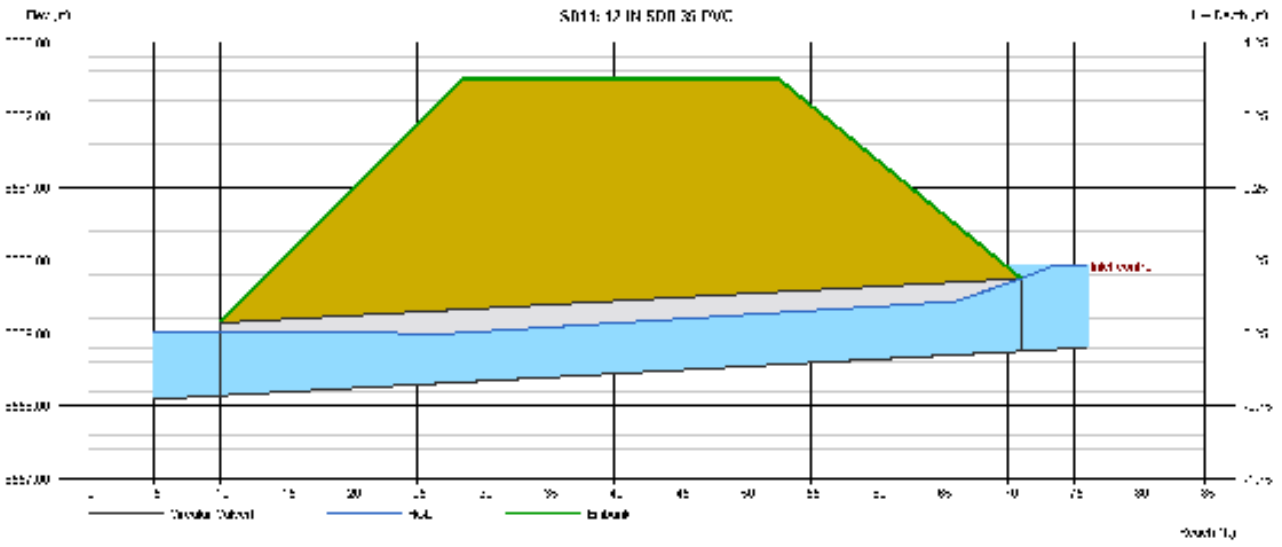

# Culvert Report

Hydraflow Express Extension for Autodesk® Civil 3D® by Autodesk, Inc. Friday, Aug 29 2025

## SD12: 15-IN ADS PIPE

| | | |
|---|---|---|
| Invert Elev Dn (ft) | = | 6565.25 |
| Pipe Length (ft) | = | 79.00 |
| Slope (%) | = | 0.49 |
| Invert Elev Up (ft) | = | 6565.64 |
| Rise (in) | = | 15.0 |
| Shape | = | Circular |
| Span (in) | = | 15.0 |
| No. Barrels | = | 1 |
| n-Value | = | 0.012 |
| Culvert Type | = | Circular Culvert |
| Culvert Entrance | = | Smooth tapered inlet throat |
| Coeff. K,M,c,Y,k | = | 0.534, 0.555, 0.0196, 0.9, 0.2 |

**Embankment**

| | | |
|---|---|---|
| Top Elevation (ft) | = | 6567.64 |
| Top Width (ft) | = | 24.00 |
| Crest Width (ft) | = | 24.00 |

**Calculations**

| | | |
|---|---|---|
| Qmin (cfs) | = | 1.00 |
| Qmax (cfs) | = | 12.00 |
| Tailwater Elev (ft) | = | (dc+D)/2 |

**Highlighted**

| | | |
|---|---|---|
| Qtotal (cfs) | = | 5.50 |
| Qpipe (cfs) | = | 5.50 |
| Qovertop (cfs) | = | 0.00 |
| Veloc Dn (ft/s) | = | 4.81 |
| Veloc Up (ft/s) | = | 5.50 |
| HGL Dn (ft) | = | 6566.35 |
| HGL Up (ft) | = | 6566.59 |
| Hw Elev (ft) | = | 6567.16 |
| Hw/D (ft) | = | 1.21 |
| Flow Regime | = | Inlet Control |

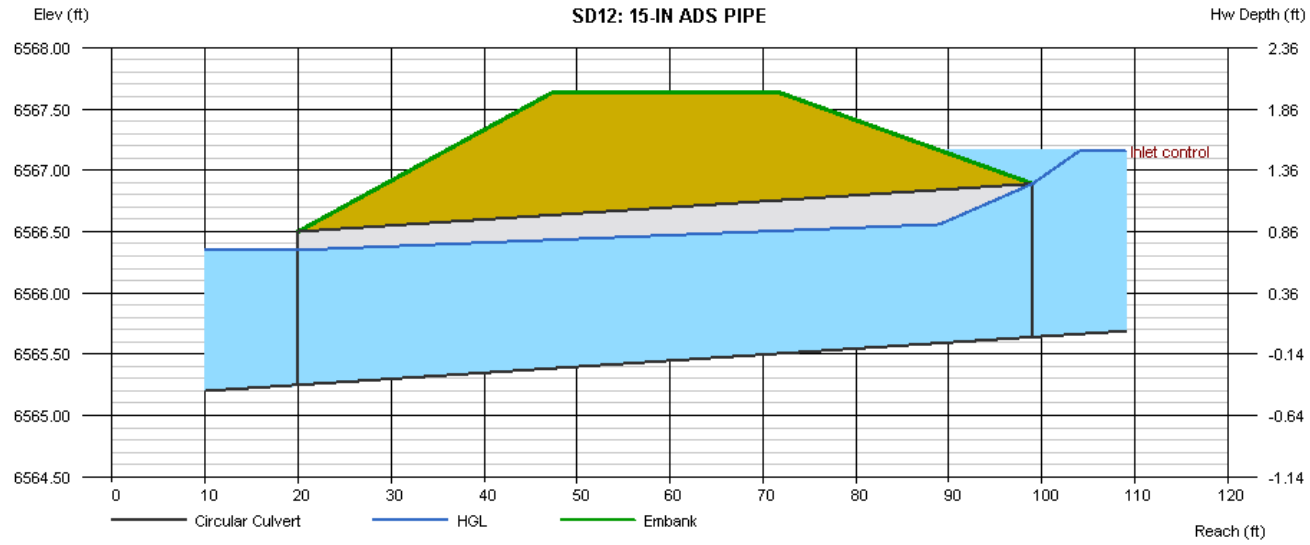

# Culvert Report

Hydraflow Express Extension for Autodesk® Civil 3D® by Autodesk, Inc. Friday, Aug 29 2025

## SD13: 15-IN ADS PIPE

| | | |
|---|---|---|
| Invert Elev Dn (ft) | = | 6564.55 |
| Pipe Length (ft) | = | 128.00 |
| Slope (%) | = | 0.50 |
| Invert Elev Up (ft) | = | 6565.19 |
| Rise (in) | = | 15.0 |
| Shape | = | Circular |
| Span (in) | = | 15.0 |
| No. Barrels | = | 1 |
| n-Value | = | 0.012 |
| Culvert Type | = | Circular Culvert |
| Culvert Entrance | = | Smooth tapered inlet throat |
| Coeff. K,M,c,Y,k | = | 0.534, 0.555, 0.0196, 0.9, 0.2 |

**Embankment**

| | | |
|---|---|---|
| Top Elevation (ft) | = | 6568.75 |
| Top Width (ft) | = | 24.00 |
| Crest Width (ft) | = | 24.00 |

**Calculations**

| | | |
|---|---|---|
| Qmin (cfs) | = | 1.00 |
| Qmax (cfs) | = | 12.00 |
| Tailwater Elev (ft) | = | (dc+D)/2 |

**Highlighted**

| | | |
|---|---|---|
| Qtotal (cfs) | = | 5.50 |
| Qpipe (cfs) | = | 5.50 |
| Qovertop (cfs) | = | 0.00 |
| Veloc Dn (ft/s) | = | 4.81 |
| Veloc Up (ft/s) | = | 4.48 |
| HGL Dn (ft) | = | 6565.65 |
| HGL Up (ft) | = | 6566.45 |
| Hw Elev (ft) | = | 6566.71 |
| Hw/D (ft) | = | 1.21 |
| Flow Regime | = | Inlet Control |

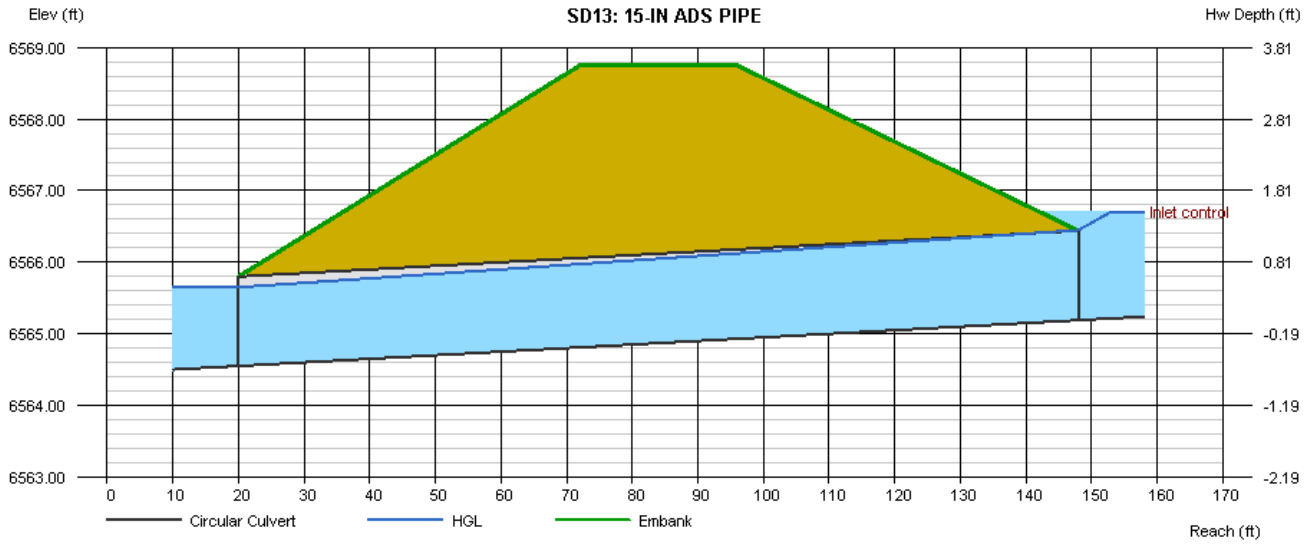

# Culvert Report

Hydraflow Express Extension for Autodesk® Civil 3D® by Autodesk, Inc. Friday, Aug 29 2025

## SD14: 15-IN ADS PIPE

| | | |
|---|---|---|
| Invert Elev Dn (ft) | = | 6563.56 |
| Pipe Length (ft) | = | 198.00 |
| Slope (%) | = | 0.48 |
| Invert Elev Up (ft) | = | 6564.52 |
| Rise (in) | = | 15.0 |
| Shape | = | Circular |
| Span (in) | = | 15.0 |
| No. Barrels | = | 1 |
| n-Value | = | 0.012 |
| Culvert Type | = | Circular Culvert |
| Culvert Entrance | = | Smooth tapered inlet throat |
| Coeff. K,M,c,Y,k | = | 0.534, 0.555, 0.0196, 0.9, 0.2 |

**Embankment**

| | | |
|---|---|---|
| Top Elevation (ft) | = | 6569.00 |
| Top Width (ft) | = | 24.00 |
| Crest Width (ft) | = | 24.00 |

**Calculations**

| | | |
|---|---|---|
| Qmin (cfs) | = | 1.00 |
| Qmax (cfs) | = | 12.00 |
| Tailwater Elev (ft) | = | (dc+D)/2 |

**Highlighted**

| | | |
|---|---|---|
| Qtotal (cfs) | = | 5.50 |
| Qpipe (cfs) | = | 5.50 |
| Qovertop (cfs) | = | 0.00 |
| Veloc Dn (ft/s) | = | 4.81 |
| Veloc Up (ft/s) | = | 4.48 |
| HGL Dn (ft) | = | 6564.66 |
| HGL Up (ft) | = | 6565.87 |
| Hw Elev (ft) | = | 6566.04 |
| Hw/D (ft) | = | 1.21 |
| Flow Regime | = | Inlet Control |

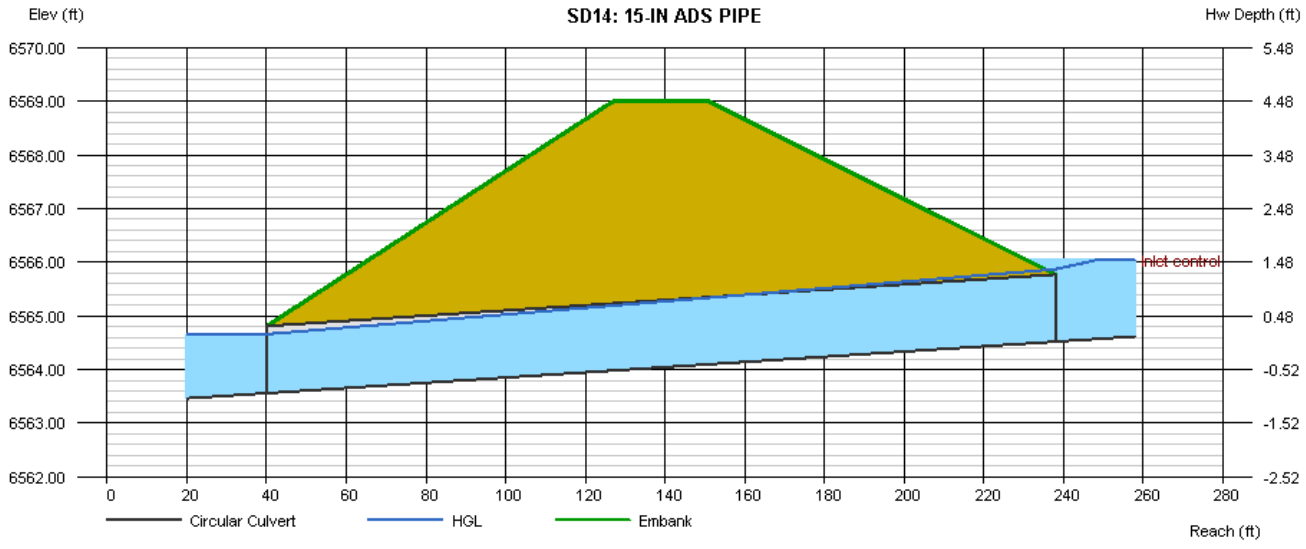

# Culvert Report

Hydraflow Express Extension for Autodesk® Civil 3D® by Autodesk, Inc. Friday, Aug 29 2025

## SD15: 15-IN ADS PIPE

| | | |
|---|---|---|
| Invert Elev Dn (ft) | = | 6562.46 |
| Pipe Length (ft) | = | 120.00 |
| Slope (%) | = | 0.72 |
| Invert Elev Up (ft) | = | 6563.32 |
| Rise (in) | = | 15.0 |
| Shape | = | Circular |
| Span (in) | = | 15.0 |
| No. Barrels | = | 1 |
| n-Value | = | 0.012 |
| Culvert Type | = | Circular Culvert |
| Culvert Entrance | = | Smooth tapered inlet throat |
| Coeff. K,M,c,Y,k | = | 0.534, 0.555, 0.0196, 0.9, 0.2 |

**Embankment**

| | | |
|---|---|---|
| Top Elevation (ft) | = | 6569.00 |
| Top Width (ft) | = | 24.00 |
| Crest Width (ft) | = | 24.00 |

**Calculations**

| | | |
|---|---|---|
| Qmin (cfs) | = | 1.00 |
| Qmax (cfs) | = | 12.00 |
| Tailwater Elev (ft) | = | (dc+D)/2 |

**Highlighted**

| | | |
|---|---|---|
| Qtotal (cfs) | = | 5.50 |
| Qpipe (cfs) | = | 5.50 |
| Qovertop (cfs) | = | 0.00 |
| Veloc Dn (ft/s) | = | 4.81 |
| Veloc Up (ft/s) | = | 5.50 |
| HGL Dn (ft) | = | 6563.56 |
| HGL Up (ft) | = | 6564.27 |
| Hw Elev (ft) | = | 6564.83 |
| Hw/D (ft) | = | 1.21 |
| Flow Regime | = | Inlet Control |

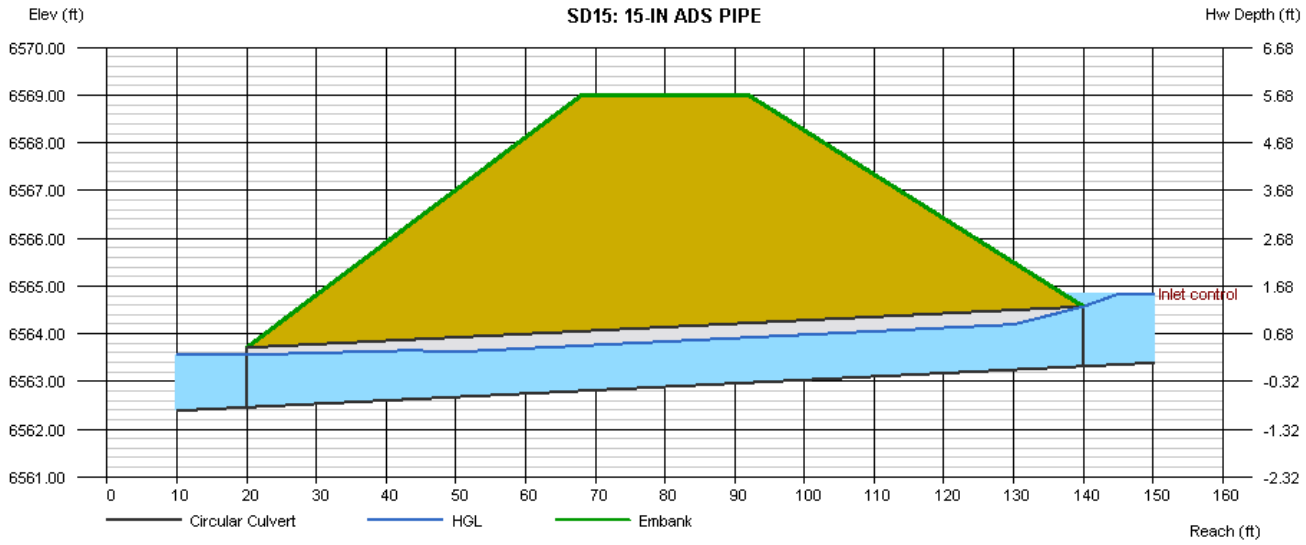

# Culvert Report

Hydraflow Express Extension for Autodesk® Civil 3D® by Autodesk, Inc. Friday, Aug 15 2025

## SD16: 12-IN SDR-35 PVC

| | | |
|---|---|---|
| Invert Elev Dn (ft) | = | 6560.00 |
| Pipe Length (ft) | = | 45.00 |
| Slope (%) | = | 1.67 |
| Invert Elev Up (ft) | = | 6560.75 |
| Rise (in) | = | 12.0 |
| Shape | = | Circular |
| Span (in) | = | 12.0 |
| No. Barrels | = | 1 |
| n-Value | = | 0.012 |
| Culvert Type | = | Circular Culvert |
| Culvert Entrance | = | Smooth tapered inlet throat |
| Coeff. K,M,c,Y,k | = | 0.534, 0.555, 0.0196, 0.9, 0.2 |

**Embankment**

| | | |
|---|---|---|
| Top Elevation (ft) | = | 6562.50 |
| Top Width (ft) | = | 24.00 |
| Crest Width (ft) | = | 24.00 |

**Calculations**

| | | |
|---|---|---|
| Qmin (cfs) | = | 1.00 |
| Qmax (cfs) | = | 12.00 |
| Tailwater Elev (ft) | = | (dc+D)/2 |

**Highlighted**

| | | |
|---|---|---|
| Qtotal (cfs) | = | 3.40 |
| Qpipe (cfs) | = | 3.40 |
| Qovertop (cfs) | = | 0.00 |
| Veloc Dn (ft/s) | = | 4.59 |
| Veloc Up (ft/s) | = | 5.12 |
| HGL Dn (ft) | = | 6560.89 |
| HGL Up (ft) | = | 6561.54 |
| Hw Elev (ft) | = | 6562.01 |
| Hw/D (ft) | = | 1.26 |
| Flow Regime | = | Inlet Control |

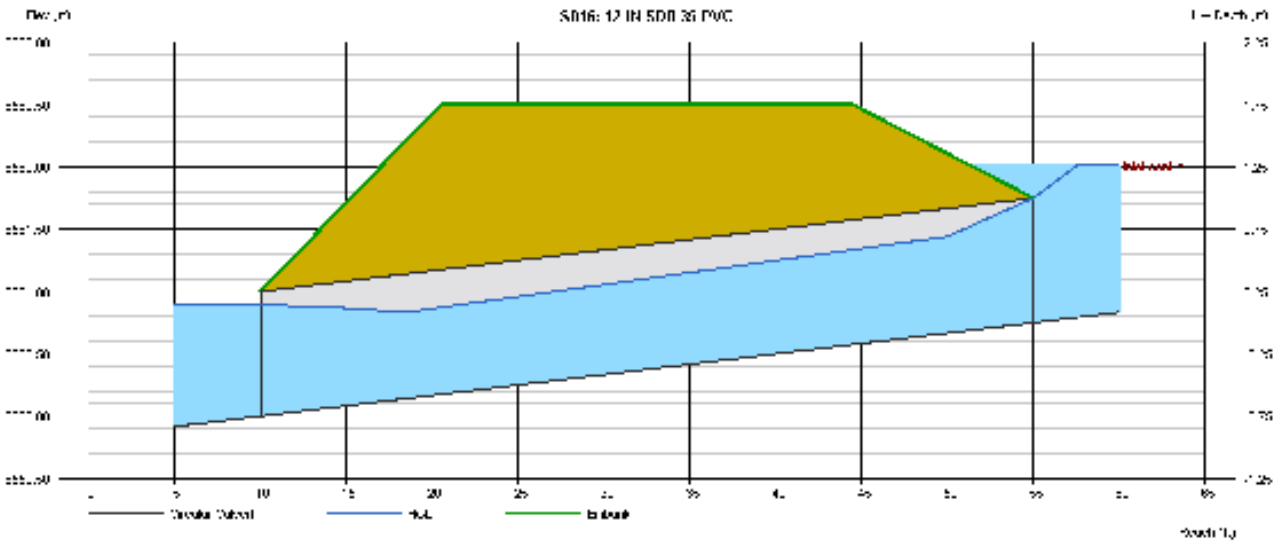

# Culvert Report



## SD17: 12-IN SDR-35 PVC

| | | |
|---|---|---|
| Invert Elev Dn (ft) | = | 6564.48 |
| Pipe Length (ft) | = | 44.00 |
| Slope (%) | = | 1.18 |
| Invert Elev Up (ft) | = | 6565.00 |
| Rise (in) | = | 6.0 |
| Shape | = | Circular |
| Span (in) | = | 6.0 |
| No. Barrels | = | 1 |
| n-Value | = | 0.012 |
| Culvert Type | = | Circular Culvert |
| Culvert Entrance | = | Smooth tapered inlet throat |
| Coeff. K,M,c,Y,k | = | 0.534, 0.555, 0.0196, 0.9, 0.2 |

**Embankment**

| | | |
|---|---|---|
| Top Elevation (ft) | = | 6567.50 |
| Top Width (ft) | = | 24.00 |
| Crest Width (ft) | = | 24.00 |

**Calculations**

| | | |
|---|---|---|
| Qmin (cfs) | = | 0.00 |
| Qmax (cfs) | = | 5.00 |
| Tailwater Elev (ft) | = | (dc+D)/2 |

**Highlighted**

| | | |
|---|---|---|
| Qtotal (cfs) | = | 0.75 |
| Qpipe (cfs) | = | 0.75 |
| Qovertop (cfs) | = | 0.00 |
| Veloc Dn (ft/s) | = | 3.93 |
| Veloc Up (ft/s) | = | 3.82 |
| HGL Dn (ft) | = | 6564.95 |
| HGL Up (ft) | = | 6565.59 |
| Hw Elev (ft) | = | 6565.73 |
| Hw/D (ft) | = | 1.47 |
| Flow Regime | = | Inlet Control |

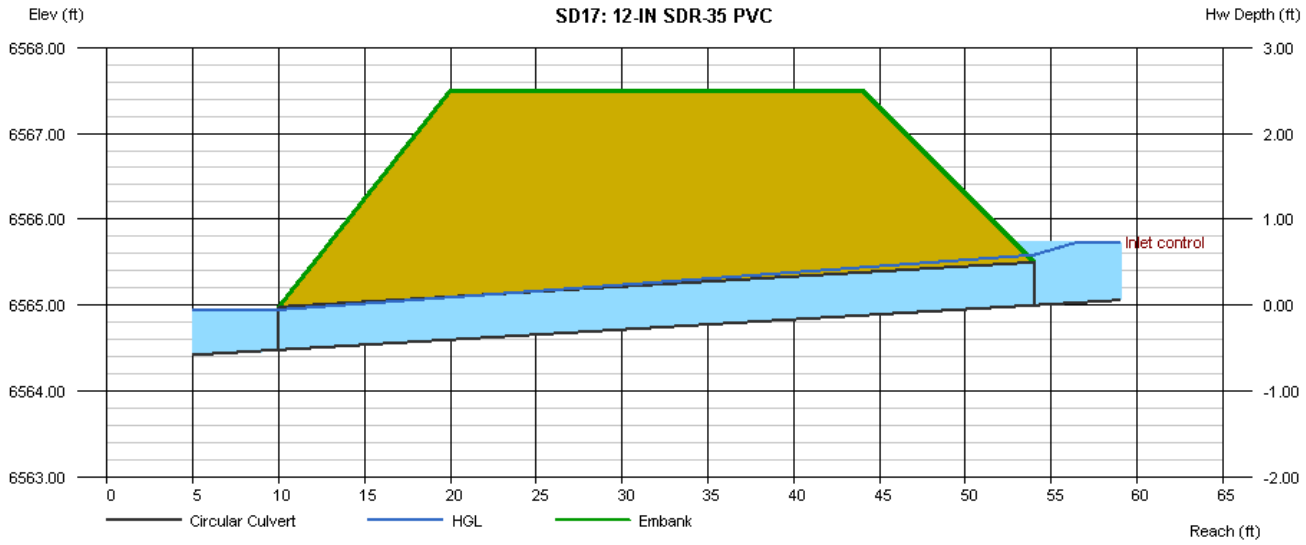

# Weir Report



## WEIR ANALYSIS FOR POND 1

**Trapezoidal Weir**

| | |
|---|---|
| Crest | = Sharp |
| Bottom Length (ft) | = 3.50 |
| Total Depth (ft) | = 1.00 |
| Side Slope (z:1) | = 2.00 |

**Calculations**

| | |
|---|---|
| Weir Coeff. Cw | = 3.10 |
| Compute by: | Q vs Depth |
| No. Increments | = 9 |

**Highlighted**

| | |
|---|---|
| Depth (ft) | = 1.00 |
| Q (cfs) | = 15.81 |
| Area (sqft) | = 5.50 |
| Velocity (ft/s) | = 2.87 |
| Top Width (ft) | = 7.50 |

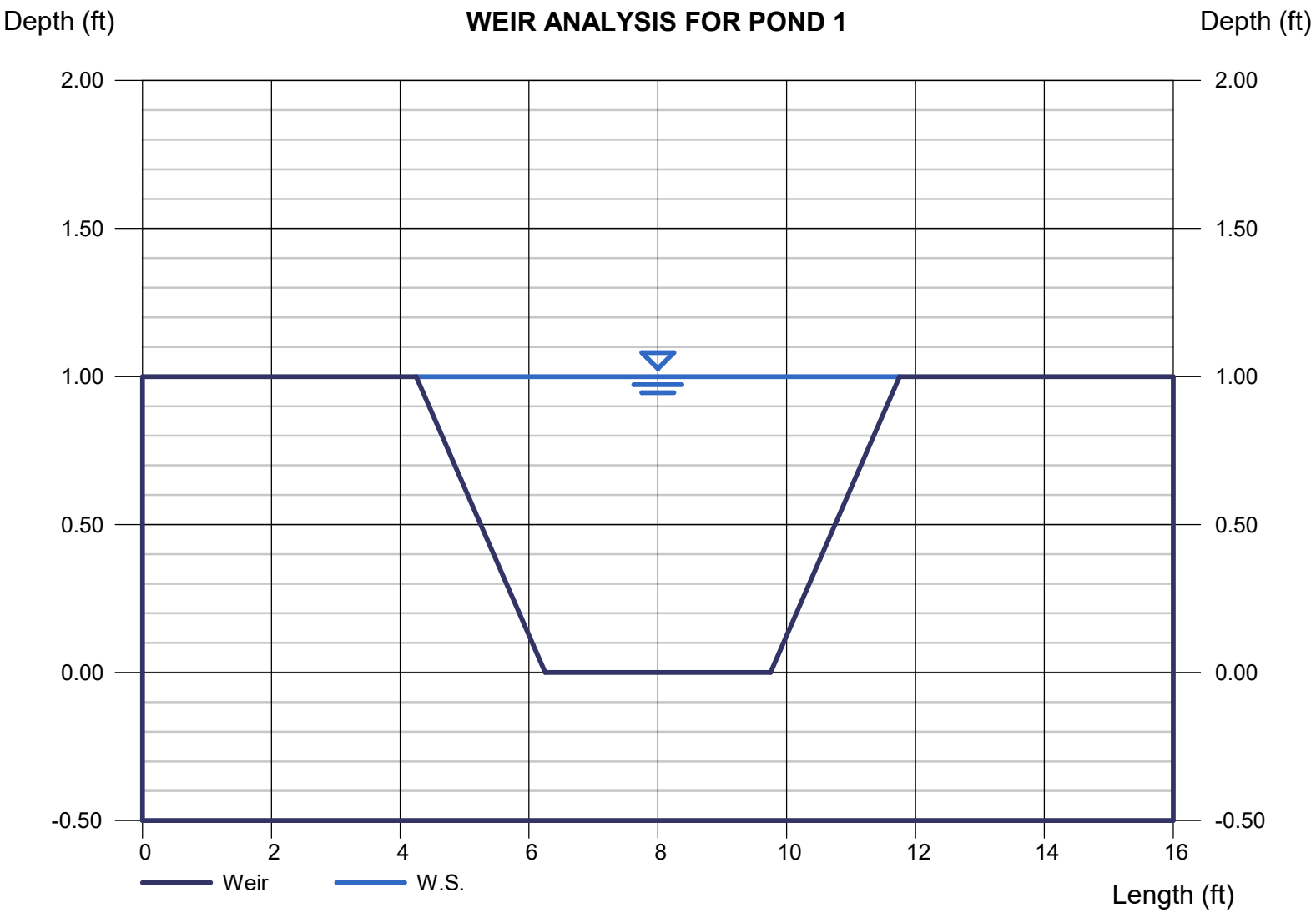

# Weir Report

Hydraflow Express Extension for Autodesk® Civil 3D® by Autodesk, Inc. Wednesday, Jul 16 2025

## WEIR ANALYSIS FOR POND 2

**Trapezoidal Weir**

| | |
|---|---|
| Crest | = Sharp |
| Bottom Length (ft) | = 7.00 |
| Total Depth (ft) | = 1.00 |
| Side Slope (z:1) | = 2.00 |

**Calculations**

| | |
|---|---|
| Weir Coeff. Cw | = 3.10 |
| Compute by: | Q vs Depth |
| No. Increments | = 9 |

**Highlighted**

| | |
|---|---|
| Depth (ft) | = 1.00 |
| Q (cfs) | = 26.66 |
| Area (sqft) | = 9.00 |
| Velocity (ft/s) | = 2.96 |
| Top Width (ft) | = 11.00 |

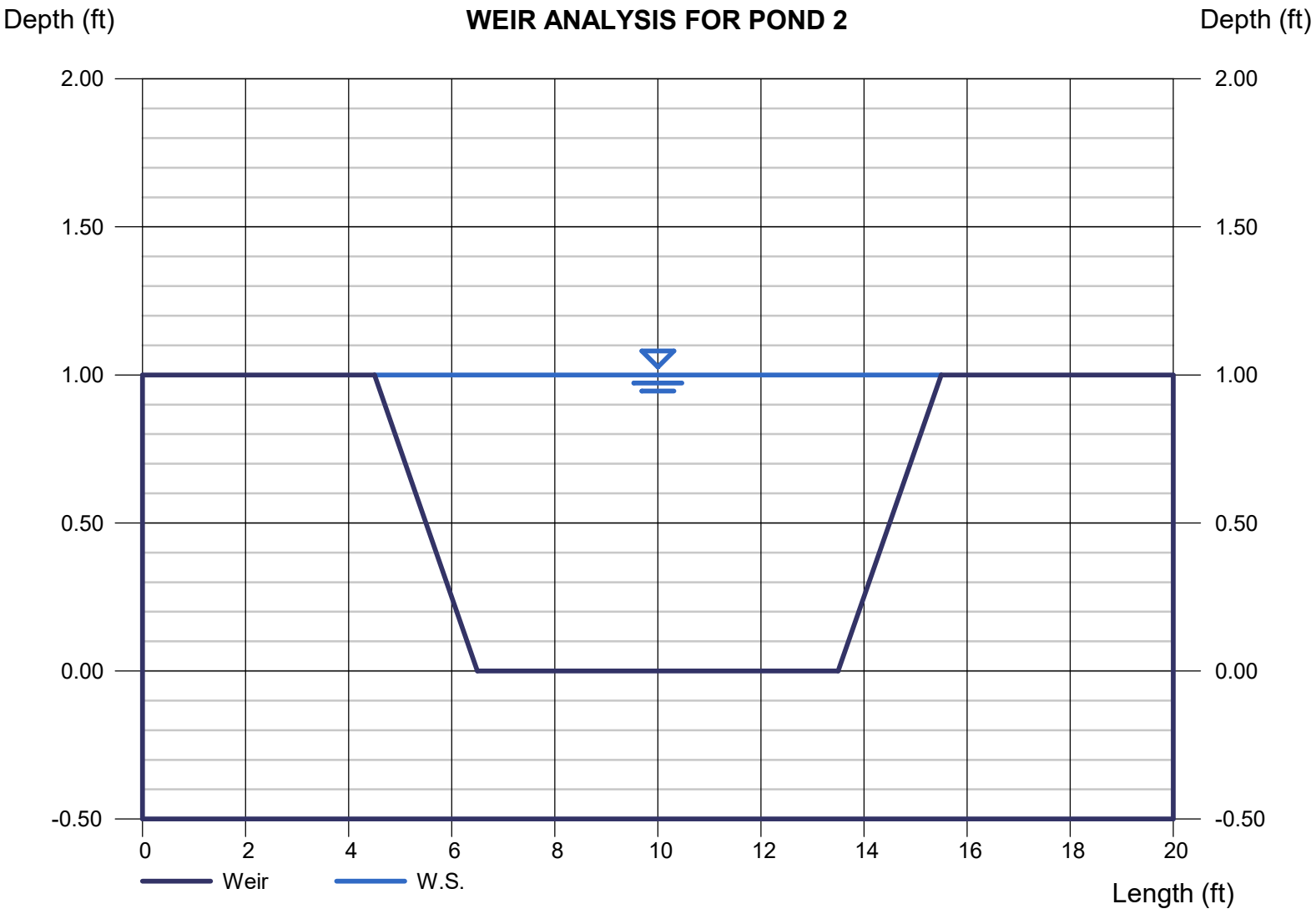

# Weir Report



## WEIR ANALYSIS FOR POND 3

**Trapezoidal Weir**

| | |
|---|---|
| Crest | = Sharp |
| Bottom Length (ft) | = 5.00 |
| Total Depth (ft) | = 1.00 |
| Side Slope (z:1) | = 2.00 |

**Calculations**

| | |
|---|---|
| Weir Coeff. Cw | = 3.10 |
| Compute by: | Q vs Depth |
| No. Increments | = 9 |

**Highlighted**

| | |
|---|---|
| Depth (ft) | = 1.00 |
| Q (cfs) | = 20.46 |
| Area (sqft) | = 7.00 |
| Velocity (ft/s) | = 2.92 |
| Top Width (ft) | = 9.00 |

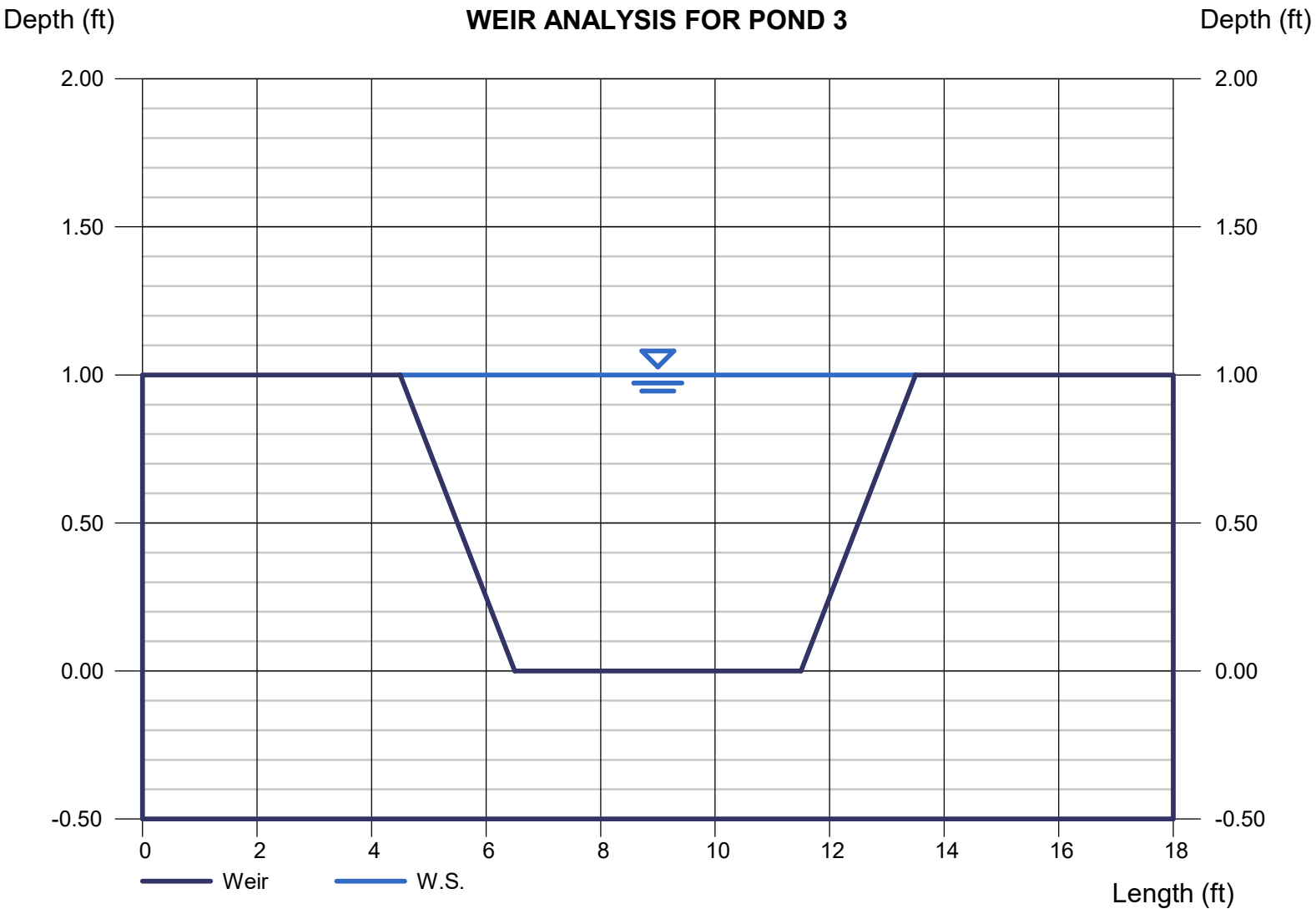

# Weir Report

Hydraflow Express Extension for Autodesk® Civil 3D® by Autodesk, Inc. Wednesday, Jul 16 2025

## WEIR ANALYSIS FOR POND 4

**Trapezoidal Weir**

| | |
|---|---|
| Crest | = Sharp |
| Bottom Length (ft) | = 1.00 |
| Total Depth (ft) | = 1.00 |
| Side Slope (z:1) | = 2.00 |

**Calculations**

| | |
|---|---|
| Weir Coeff. Cw | = 3.10 |
| Compute by: | Q vs Depth |
| No. Increments | = 9 |

**Highlighted**

| | |
|---|---|
| Depth (ft) | = 1.00 |
| Q (cfs) | = 8.060 |
| Area (sqft) | = 3.00 |
| Velocity (ft/s) | = 2.69 |
| Top Width (ft) | = 5.00 |

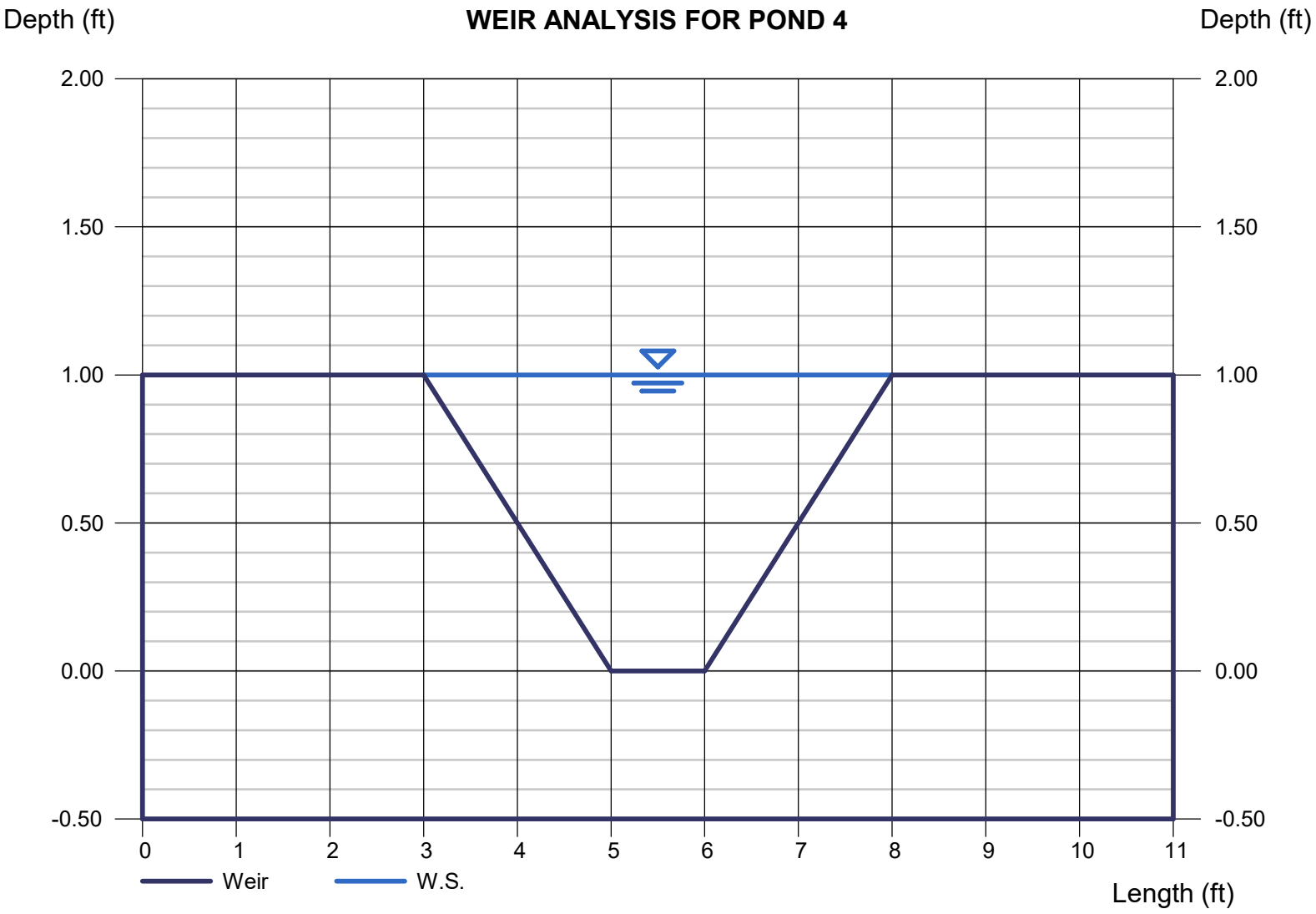

# Channel Report

Hydraflow Express Extension for Autodesk® Civil 3D® by Autodesk, Inc. Wednesday, Dec 11 2024

## SUBBASIN 2-5: SWALE SIZING ANALYSIS

**Triangular**

| | |
|---|---|
| Side Slopes (z:1) | = 2.00, 2.00 |
| Total Depth (ft) | = 3.50 |
| Invert Elev (ft) | = 6564.52 |
| Slope (%) | = 0.50 |
| N-Value | = 0.026 |

**Calculations**

| | |
|---|---|
| Compute by: | Q vs Depth |
| No. Increments | = 10 |

**Highlighted**

| | |
|---|---|
| Depth (ft) | = 1.75 |
| Q (cfs) | = 21.02 |
| Area (sqft) | = 6.13 |
| Velocity (ft/s) | = 3.43 |
| Wetted Perim (ft) | = 7.83 |
| Crit Depth, Yc (ft) | = 1.48 |
| Top Width (ft) | = 7.00 |
| EGL (ft) | = 1.93 |

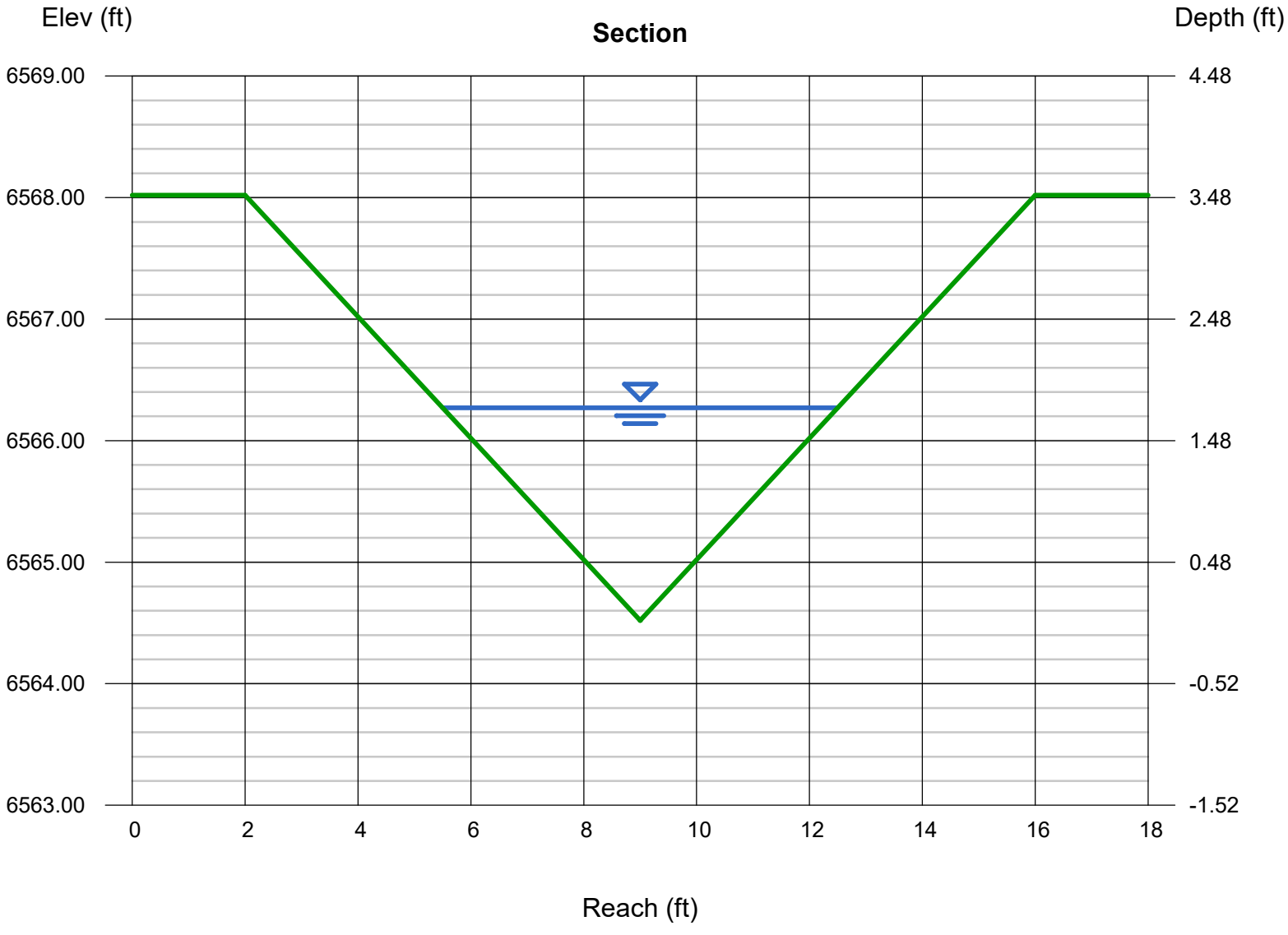

# Inlet Report



## GRATE INLET CAPACITY ANALYSIS

**Drop Grate Inlet**

| | |
|---|---|
| Location | = Sag |
| Curb Length (ft) | = -0- |
| Throat Height (in) | = -0- |
| Grate Area (sqft) | = 9.52 |
| Grate Width (ft) | = 2.80 |
| Grate Length (ft) | = 3.43 |

**Gutter**

| | |
|---|---|
| Slope, Sw (ft/ft) | = 0.020 |
| Slope, Sx (ft/ft) | = 0.020 |
| Local Depr (in) | = -0- |
| Gutter Width (ft) | = 2.00 |
| Gutter Slope (%) | = -0- |
| Gutter n-value | = -0- |

**Calculations**

| | |
|---|---|
| Compute by: | Q vs Depth |
| Max Depth (in) | = 3 |

**Highlighted**

| | |
|---|---|
| Q Total (cfs) | = 3.50 |
| Q Capt (cfs) | = 3.50 |
| Q Bypass (cfs) | = -0- |
| Depth at Inlet (in) | = 2.47 |
| Efficiency (%) | = 100 |
| Gutter Spread (ft) | = 23.40 |
| Gutter Vel (ft/s) | = -0- |
| Bypass Spread (ft) | = -0- |
| Bypass Depth (in) | = -0- |

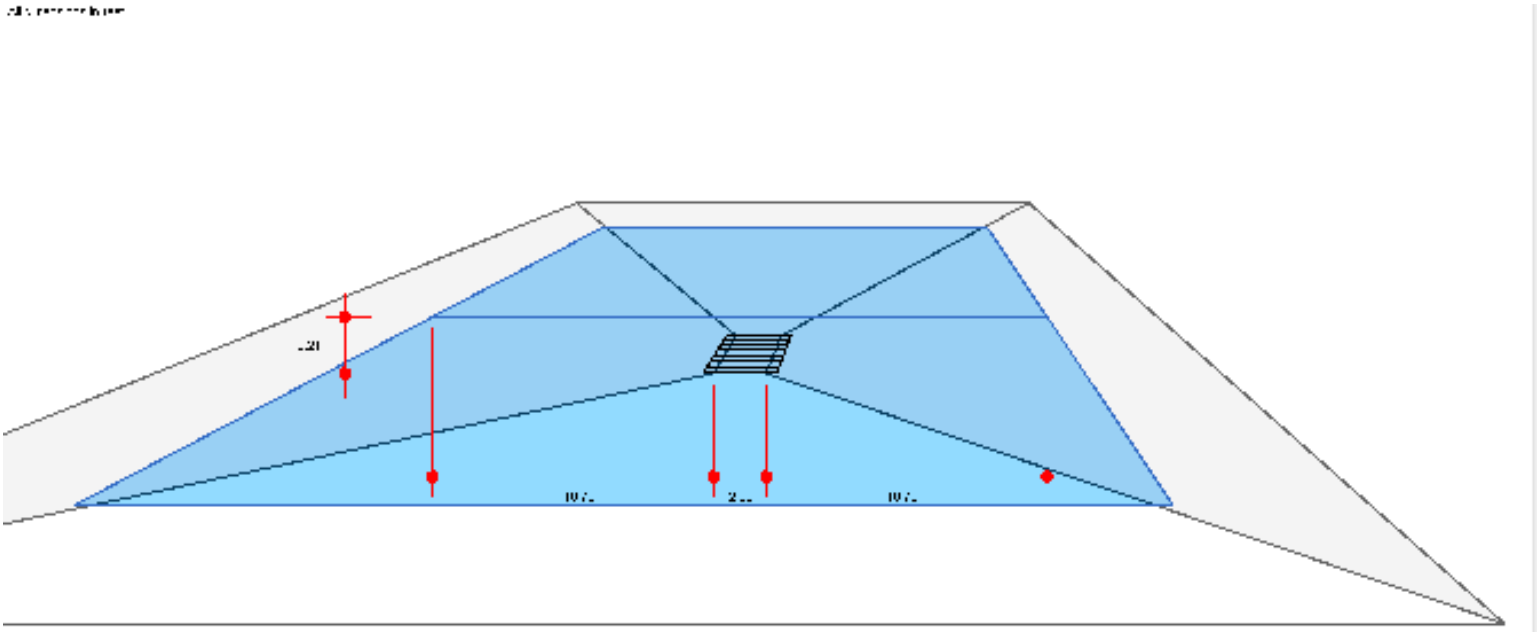

# Appendix F

Grading and Drainage Plan

100 YEAR FLOOD WAY

100 YEAR FLOOD PLAIN

LEGEND

SURFACE FLOW

EXISTING 1-FT CONTOURS

PROPOSED 1-FT CONTOURS

**NOTE:** PARCEL NORTH OF THE PROJECT DRAINS INDEPENDENTLY TO THE WEST. DRAINAGE HAS BEEN DESIGNED AND INSTALLED BY OTHERS AFTER TOPOGRAPHIC SURVEY OF SUBJECT PARCEL WAS PERFORMED.

N

100 0 100 200
scale 50 feet

70-FT R.O.W (TYP.)

COUNTY ROAD 252

20-FT UTILITY EASEMENT (TYP.)

BATHHOUSE

45-ACCESS EASEMENT

SEE STORM P-PROS FOR DETAILS

SEE STORM P-PROS FOR DETAILS

PROPERTY LINE (TYP.)

DELINEATED WETLANDS

SEE STORM P-PROS FOR DETAILS

DETENTION POND 1
WQCV: 0.084 ACRE-FT
TOT VOL: 0.408 ACRE-FT
BOTTOM ELEV: 6560.00
TOP ELEV: 6562.50

RIPRAP CHANNEL

WEIR

TOP OF RIVER BANK LINES ARE APPROXIMATE AND NOT GIVEN BY SURVEYED DATA (TYP.)

30-FT UTILITY EASEMENT

ANIMAS RIVER

NORTH ROAD 1

EAST ROAD

NORTH ROAD 2

NORTH ROAD 3

M. EAST ROAD

WEST ROAD

WEST ROAD

SOUTH ROAD 1

SOUTH ROAD 2

SOUTH ENTRANCE ROAD

SUBBASIN 1

SUBBASIN 2

SUBBASIN 3

SUBBASIN 4

SUBBASIN 5

SUBBASIN 6

SUBBASIN 7

WEIR

RIPRAP CHANNEL

DETENTION POND 3
WQCV: 0.129 ACRE-FT
TOT VOL: 0.289 ACRE-FT
BOTTOM ELEV: 6561.00
TOP ELEV: 6564.00

DETENTION POND 4
WQCV: 0.011 ACRE-FT
TOT VOL: 0.032 ACRE-FT
BOTTOM ELEV: 6565.50
TOP ELEV: 6567.50

WEIR

RIPRAP CHANNEL

APPROXIMATE WATERLINE

DETENTION POND 2
WQCV: 0.166 ACRE-FT
TOT VOL: 0.528 ACRE-FT
BOTTOM ELEV: 6560.00
TOP ELEV: 6562.50

ANIMAS RIVER

Save: 8/20/2025 3:46 PM scollins Plot: 8/29/2025 8:03 AM \\sehinc.com\panzura\pzprojects\PTR\ROBRE\168892\5-final-dsgn\51-drawings\10-Civil\cad\dwg\sheet_Village Camp\168892_GP.dwg

| | | | | | | | | | |
|---|---|---|---|---|---|---|---|---|---|
| SEH Project | 168892 | Rev.# | Revision Issue Description | Date | Rev.# | Revision Issue Description | Date | I HEREBY CERTIFY THAT THIS PLAN WAS PREPARED BY ME OR UNDER MY DIRECT SUPERVISION AND THAT I AM A DULY LICENSED PROFESSIONAL ENGINEER UNDER THE LAWS OF THE STATE OF CO. | VILLAGE CAMP DURANGO<br>DURANGO, COLORADO | **GRADING AND DRAINAGE PLAN** | 9 |
| Drawn By | SC/CM | | | | | | | | | | |
| Designed By | TM | | | | | | | TRAVIS MOONEY<br>DATE 01/17/2025 LICENSE NO. 0051259 | | | of 87 |
| Checked By | SW | | | | | | | | | | |

# Building a Better World for All of Us®

Sustainable buildings, sound infrastructure, safe transportation systems, clean water, renewable energy and a balanced environment. Building a Better World for All of Us communicates a company-wide commitment to act in the best interests of our clients and the world around us.

We're confident in our ability to balance these requirements.

JOIN OUR SOCIAL COMMUNITIES